PEARL DRUMS
Spare Parts Catalog
2016

CONTENTS

DRUM PEDALS ..... 1~11
HI-HAT STANDS ..... 12~15
REMOTE HI-HAT 17
HI-HAT ACCESSORIES 18
ACCESSORIES 19
SNARE STANDS ..... 20~21
DRUM THRONES ..... 22~25
CYMBAL STANDS ..... 26~27
CYMBAL BOOM STANDS ..... 28~30
CYMBAL HOLDERS ..... 31~32
ADAPTERS 33
TOM HOLDERS 34
TOM STANDS 35
TOM CYMBAL STANDS 36
DRUM RACKS, PIPE CLAMPS, RACK JOINT ..... 37~38
OPTIMOUNT, OPTI-LOC 39
TOM HOLDER BASES, BRACKETS 40
BASS DRUM SPURS 41
FLOOR TOM LEG BRACKETS & LEGS 42
STOP LOCKS, SNARE WIRES 43
HOOPS 44
STRAINERS ..... 45~46
LUGS ..... 47~48
BOLTS, TENSION CLAWS 48
F.F.S. SNARE DRUM 49
PRACTICE PADS 50

www.pearldrum.com

Products and specifications are subject to change without notice.

Oct 2016.

DRUM PEDALS

P-830

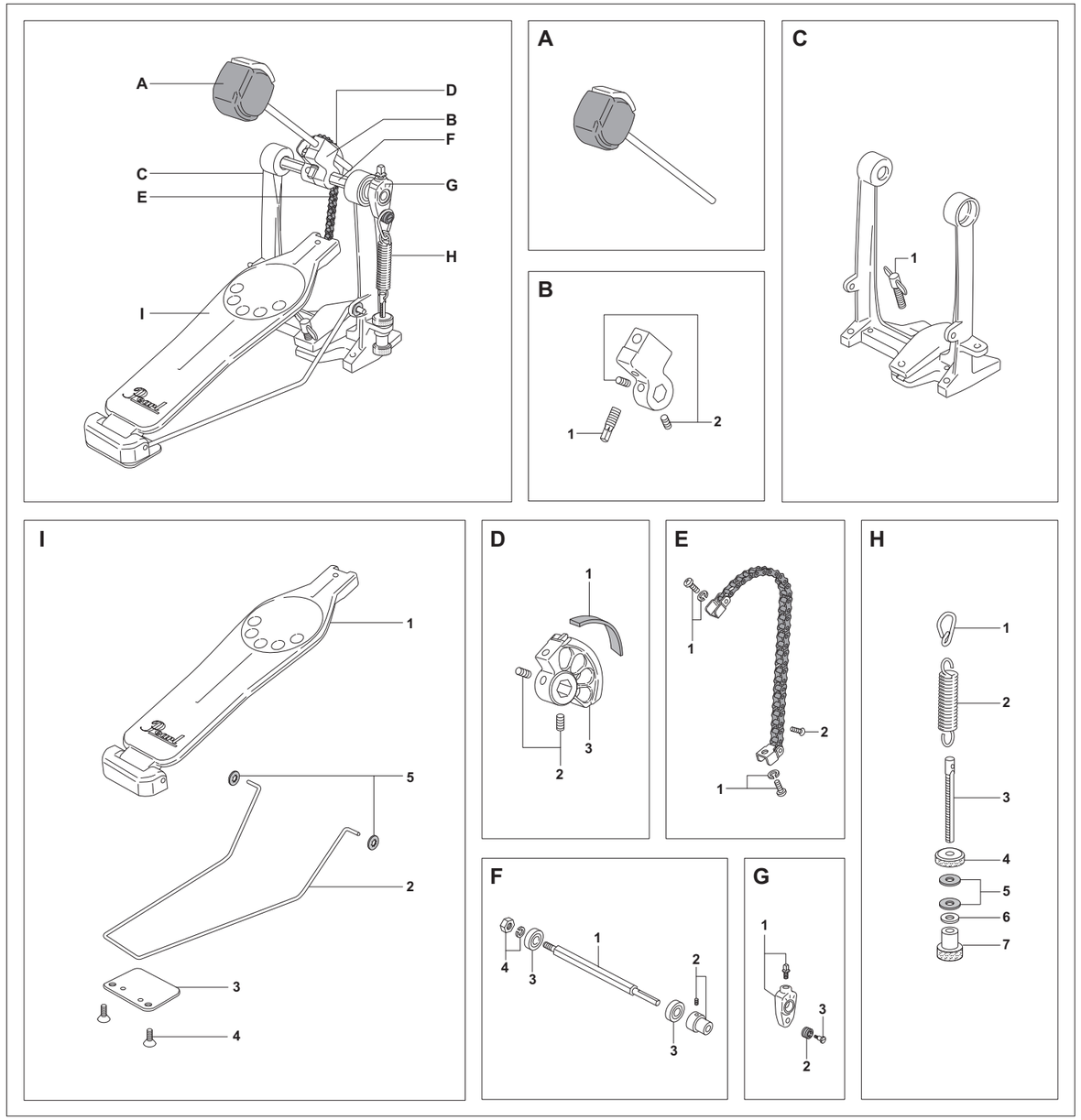

A	**DB-100**	**"DuoBeat" 2 Way Beater**
B	**AD-022A**	**Beater Holder Link Complete**
1	KB-814	Key Bolt
2	SB-66	Allen Screw (one each)
C	**PF-P89A**	**Pedal Frame w/Hoop Clamp**
1	ME-69	Handle Bolt
D	**AD-021AA**	**Aluminum Wheel Assy. Complete**
1	FL-002	Felt Strip
2	SB-66	Allen Screw (one each)
3	AD-021	Aluminum Wheel ONLY
E	**ME-805A**	**Connecting Chain Assy. Complete**
1	SC-468W	Screw w/Washer (one set)
2	SC-327H	Flat Head Screw
F	**SM-077AC**	**Hexagonal Axle Assy.**
1	SM-077	Hexagonal Axle ONLY
2	SM-029AN	Axle Sleeve w/Allen Screw
3	NU-07B	Bearing (one each)
4	BSA-3	End Nut w/Washer
G	**ZD-037AC**	**Beater Angle Cam Complete**
1	ZD-037A	Beater Angle Cam w/Key Bolt
2	PM-003	Cam Roller
3	ME-170B	Cam Bolt
H	**SPA-90A**	**Spring Assy. Complete**
1	SCH-01	Hook
2	SP-31F	Spring (w/Felt) ONLY
3	ME-166	Adjustment Bolt
4	SM-032	Upper Nut
5	RB-005	Washers (one each)
6	WS-27	Lock Washer
7	SM-033	Lower Nut
I	**FB-930UA**	**Footboard Assy. Complete**
1	FB-930U	Footboard ONLY
2	RR-83	Radius Rod
3	STL-2	Radius Rod Cover
4	SC-366SC	Screw (one each)
5	WS-50	Push Nut (Radius Rod Stopper) (one each)

DRUM PEDALS

P-930

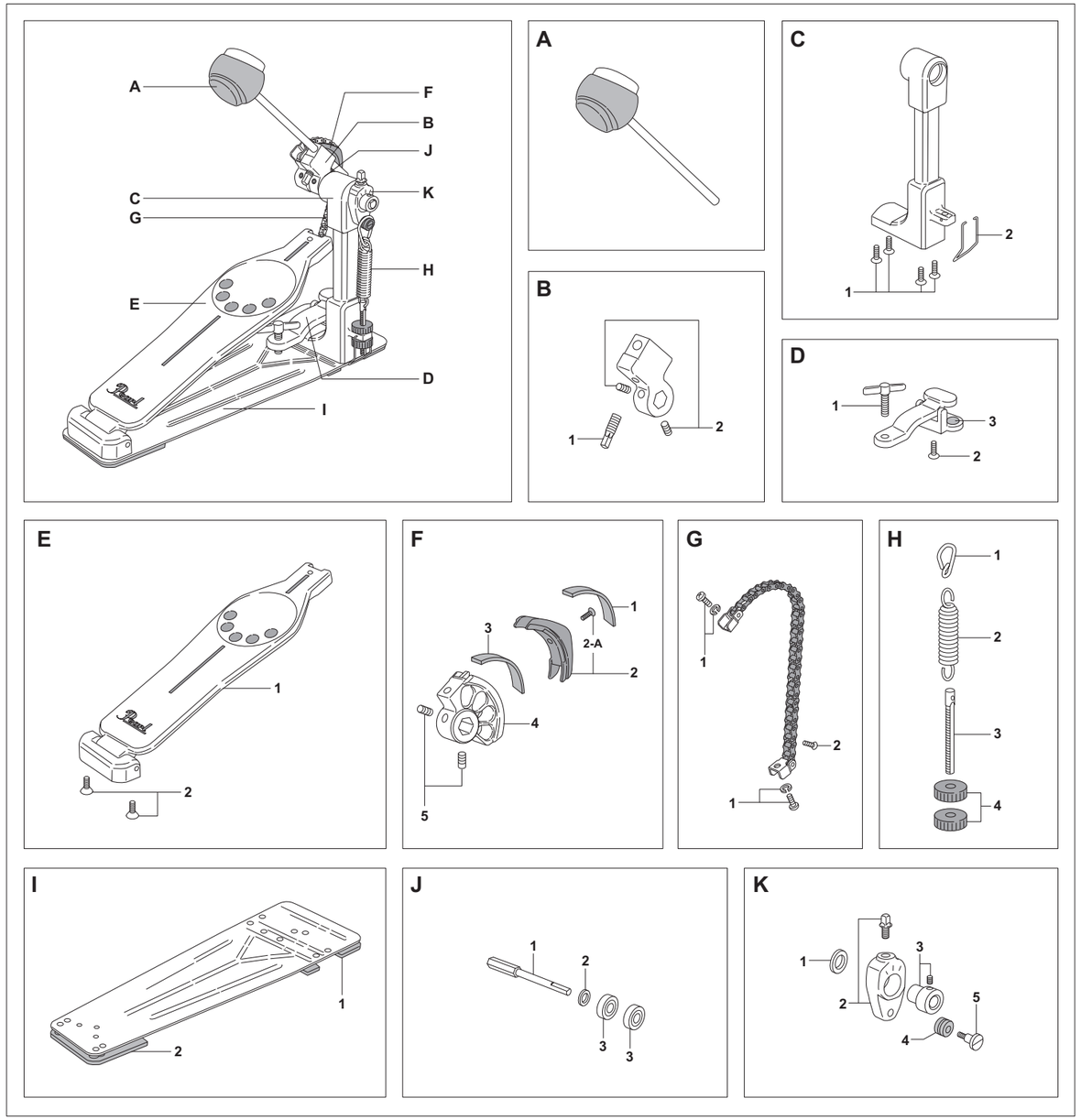

A	**DB-150**	**DuoBeat Beater**
B	**AD-022A**	**Beater Holder Link Complete**
1	KB-814	Key Bolt
2	SB-66	Allen Screw (one each)
C	**AD-020AH**	**Pedal Post**
1	SC-366SC	Screw (one each)
2	SG-014	Click Lock Lever
D	**AD-023NA**	**Hoop Clamp Assy.**
1	ME-808	Handle Bolt
2	SC-366SC	Screw
3	RB-014	Rubber Grip (one each)
E	**FB-930A**	**Footboard Assy. Complete**
1	FB-930	Footboard ONLY
2	SC-418	Screw (one each)
F	**AD-021A**	**Aluminum Wheel Assy. Complete**
1	FL-003	Felt Strip
2	PL-041A	Detachable Cam w/Screw
2-A	SC-385	Screw
3	FL-002	Felt Strip
4	AD-021	Aluminum Wheel ONLY
5	SB-66	Allen Screw (one each)
G	**ME-805A**	**Connecting Chain Assy. Complete**
1	SC-468W	Screw w/Washer (one set)
2	SC-327H	Flat Head Screw
H	**SPA-930**	**Spring Assy. Complete**
1	SCH-01	Hook
2	SP-64F	Spring (w/Felt) ONLY
3	ME-166	Adjustment Bolt
4	NP-470	Nut (one each)
I	**PWP-930A**	**Powerplate Assy. Complete**
1	RB-012	Rubber Mat (Front)
2	RB-013	Rubber Mat (Heel)
J	**SM-063A**	**Hexagonal Axle Assy.**
1	SM-063	Hexagonal Axle ONLY
2	WS-49	Washer
3	NU-07B	Bearing (one each)
K	**ZD-037ACC**	**Beater Angle Cam Complete**
1	WS-43	Washer
2	ZD-037A	Beater Angle Cam w/Key Bolt
3	SM-029AN	Axle Sleeve w/Allen Screw
4	PM-003	Cam Roller
5	ME-170B	Cam Bolt

DRUM PEDALS

P-932

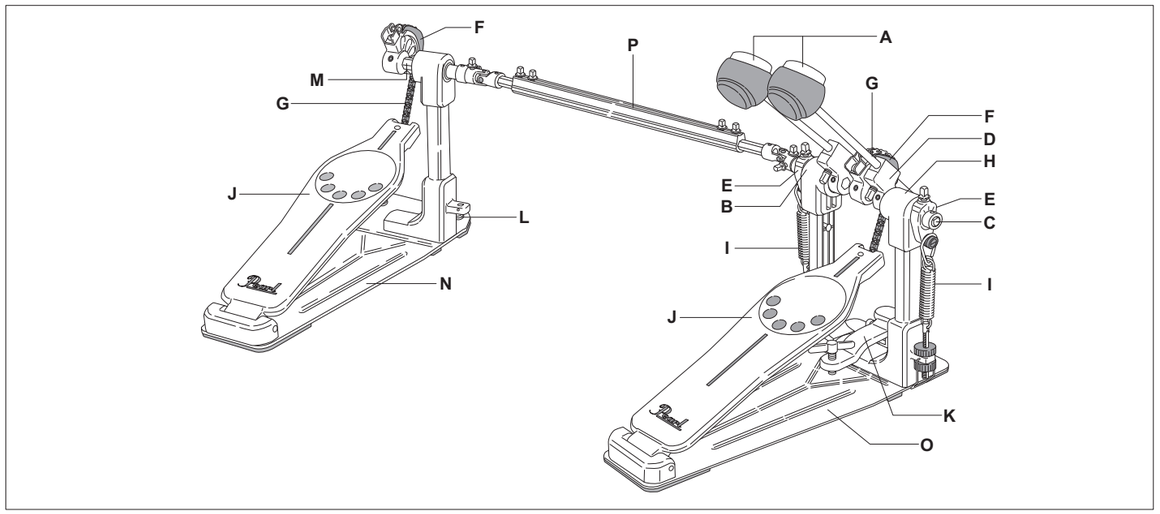

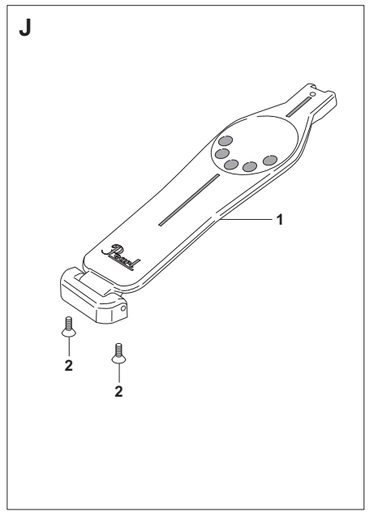

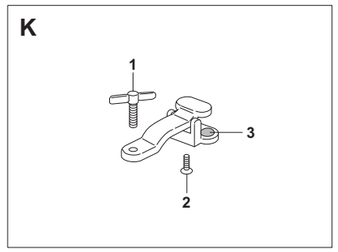

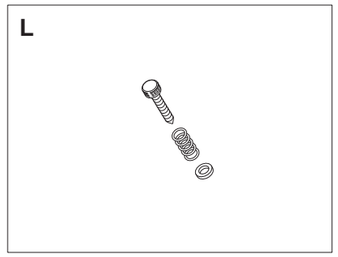

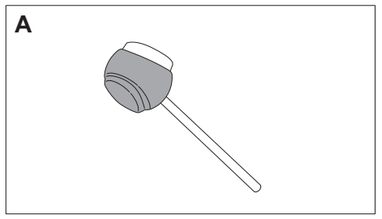

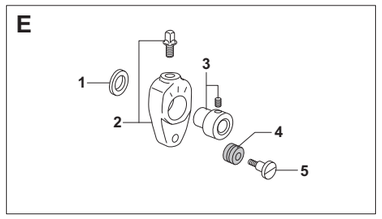

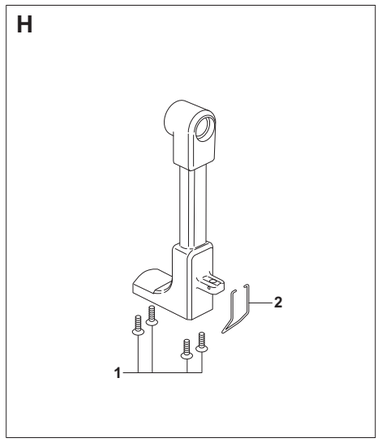

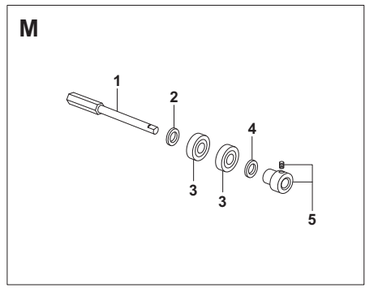

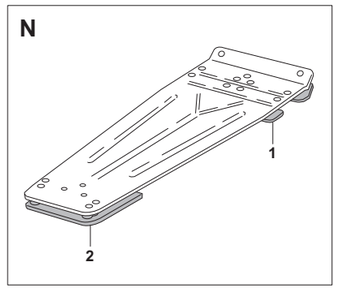

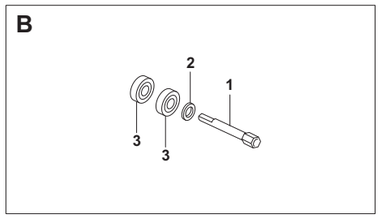

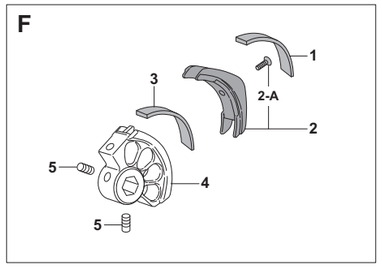

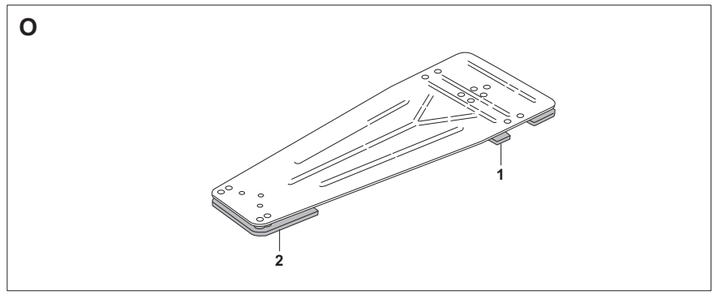

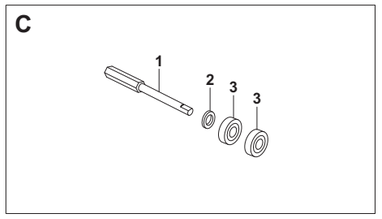

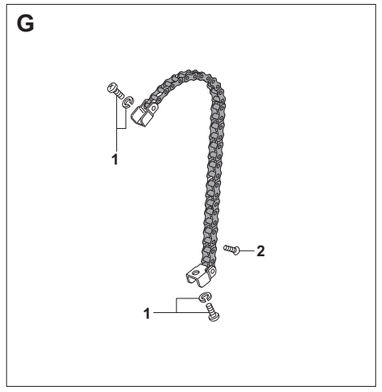

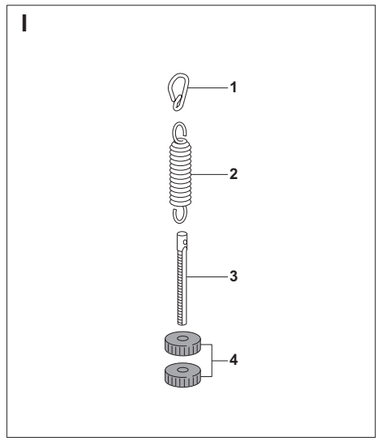

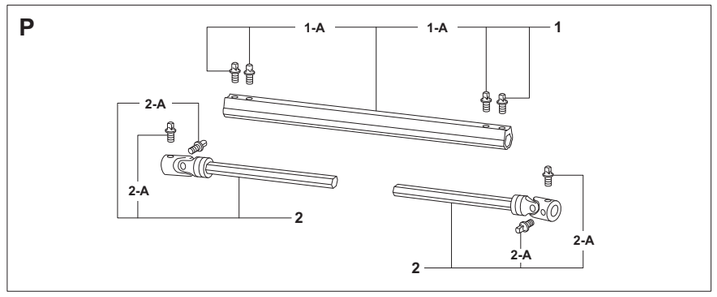

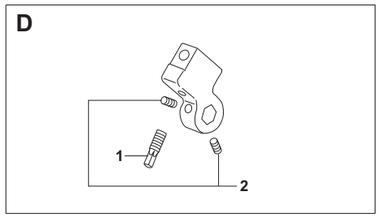

A	**DB-150**	**DuoBeat Beater**
B	**SM-065A**	**Hexagonal Axle Assy.**
1	SM-065	Hexagonal Axle ONLY
2	WS-49	Washer
3	NU-07B	Bearing (one each)
C	**SM-064A**	**Hexagonal Axle Assy.**
1	SM-064	Hexagonal Axle ONLY
2	WS-49	Washer
3	NU-07B	Bearing (one each)
D	**AD-022A**	**Beater Holder Link Complete**
1	KB-814	Key Bolt
2	SB-66	Allen Screw (one each)
E	**ZD-037ACC**	**Beater Angle Cam Complete**
1	WS-43	Washer
2	ZD-037A	Beater Angle Cam w/Key Bolt
3	SM-029AN	Axle Sleeve w/Allen Screw
4	PM-003	Cam Roller
5	ME-170B	Cam Bolt
F	**AD-021A**	**Aluminum Wheel Assy. Complete**
1	FL-003	Felt Strip
2	PL-041A	Detachable Cam w/Screw
2-A	SC-385	Screw
3	FL-002	Felt Strip
4	AD-021	Aluminum Wheel ONLY
5	SB-66	Allen Screw (one each)
G	**ME-805A**	**Connecting Chain Assy. Complete**
1	SC-468W	Screw w/Washer (one set)
2	SC-327H	Flat Head Screw
H	**AD-020AH**	**Pedal Post**
1	SC-366SC	Screw (one each)
2	SG-014	Click Lock Lever
I	**SPA-930**	**Spring Assy. Complete**
1	SCH-01	Hook
2	SG-014	Spring (w/Felt) ONLY
3	ME-166	Adjustment Bolt
4	NP-470	Nut (one each)
J	**FB-930A**	**Footboard Assy. Complete**
1	FB-930	Footboard ONLY
2	SC-418	Screw (one each)
K	**AD-023NA**	**Hoop Clamp Assy.**
1	ME-808	Handle Bolt
2	SC-366SC	Screw
3	RB-014	Rubber Grip (one each)
L	**LT-626W**	**Anchor Screw w/Spring & Washer (one set)**
M	**SM-063AC**	**Hexagonal Axle Assy.**
1	SM-063	Hexagonal Axle ONLY
2	WS-49	Washer
3	NU-07B	Bearing (one each)
4	WS-43	Washer
5	SM-029AN	Axle Sleeve w/Allen Screw
N	**PWP-932SA**	**Powerplate Assy. Complete (Left side)**
1	RB-012	Rubber Mat (Front)
2	RB-013	Rubber Mat (Heel)
O	**PWP-932MA**	**Powerplate Assy. Complete (Right side)**
1	RB-011	Rubber Mat (Front)
2	RB-013	Rubber Mat (Heel)
P	**DS-230A**	**Drive Shaft Assy. Complete**
1	SP-604A	Drive Shaft Sleeve w/Key Bolts
1-A	KB-608D	Key Bolt (one each)
2	HS-230A	Hexagonal Drive Shaft w/Key Bolts (one set)
2-A	KB-508D	Key Bolt (one each)

DRUM PEDALS

P-2052C / 2052B

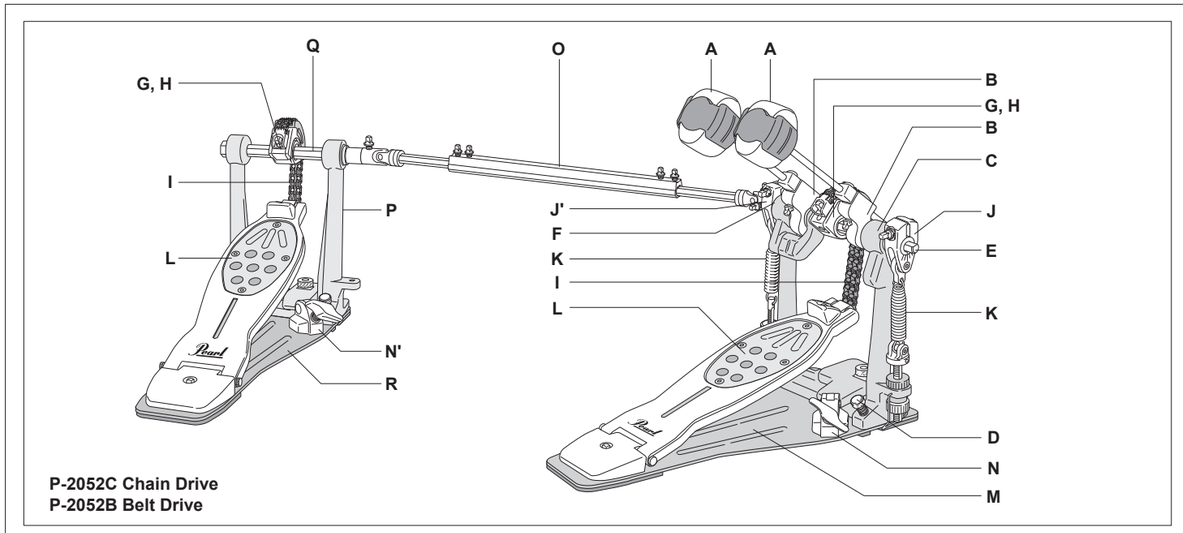

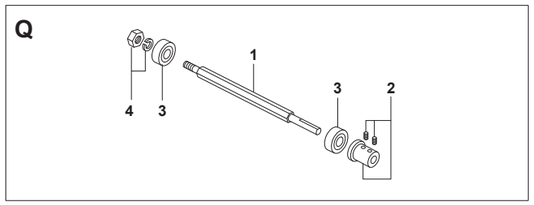

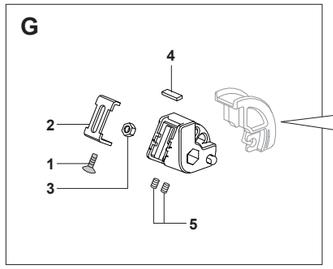

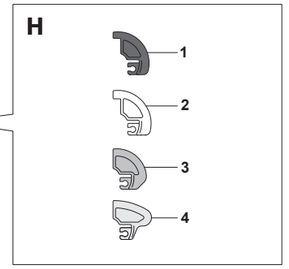

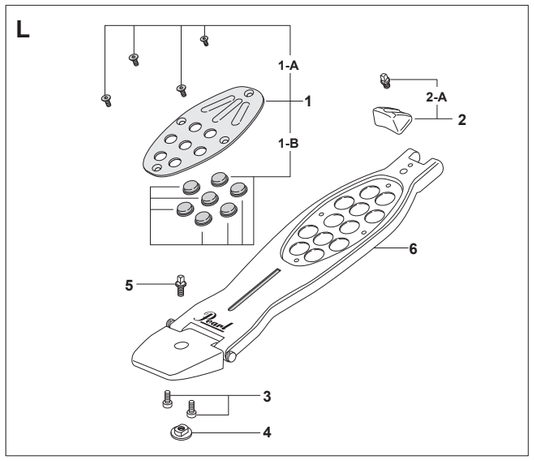

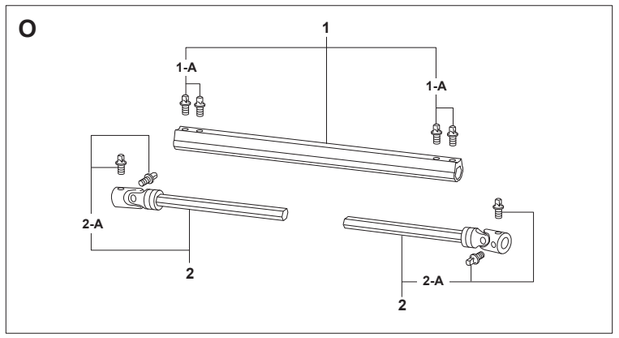

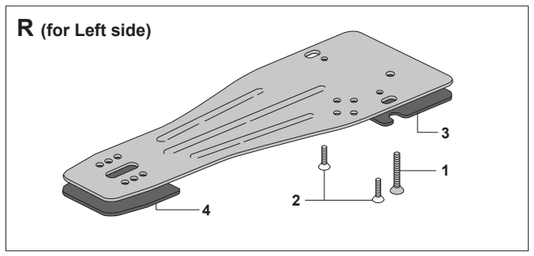

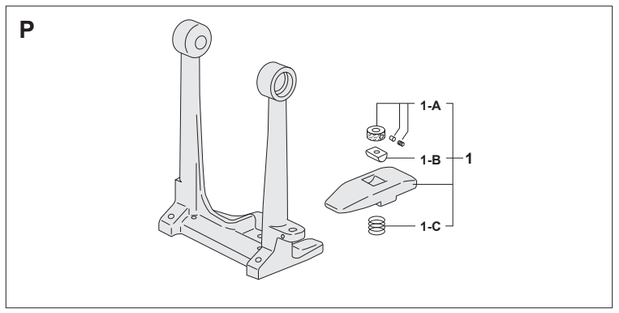

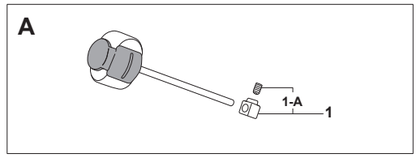

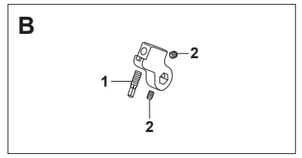

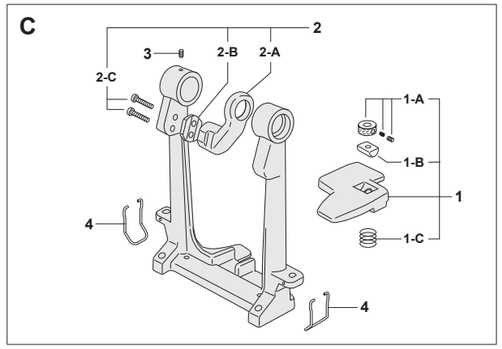

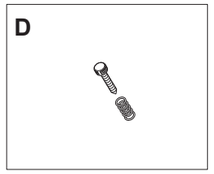

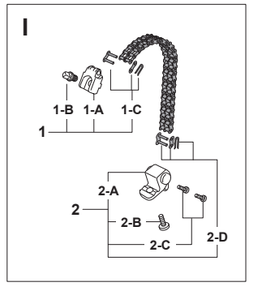

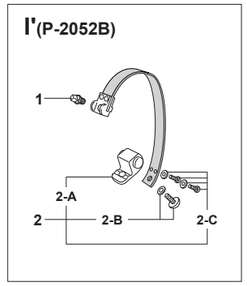

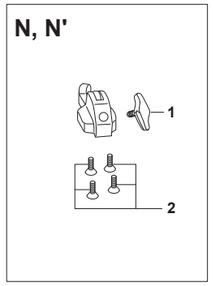

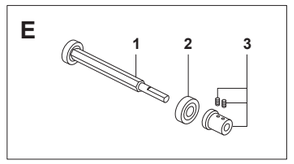

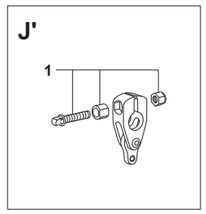

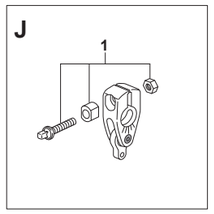

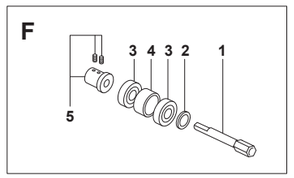

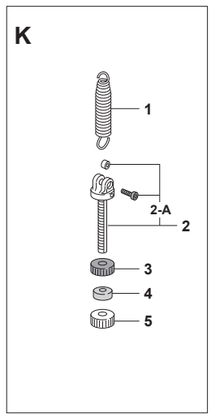

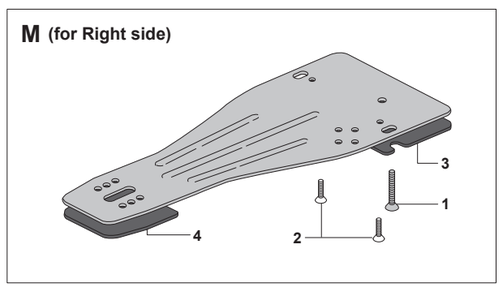

A	**B-250QB**	**Quad Beater Complete**
1	AD-044A	Beater Setting Stopper Assy.
1-A	SB-66	Allen Screw
B	**AD-035A**	**Beater Holder Link Complete**
1	KB-814	Key Bolt
2	SB-66	Allen Screw (one each)
C	**DC-515VA**	**Pedal Frame w/Hoop Clamp**
1	DC-517VCA	Hoop Clamp Assy.
1-A	SM-119A	Adjustment Knob Assy.
1-B	ME-507	Pivot Block
1-C	SG-001	Spring
2	DC-516VA	Axle Support Arm Assy. Comp
2-A	DC-516V	Axle Support Arm
2-B	DC-314V	Axle Support Arm Spacer
2-C	SC-222	Screw (one each)
3	SB-44	Allen Screw
4	SP-82	Click Lock Lever (one each)
D	**LT-636**	**Anchor Screw w/Spring**
E	**SM-114A**	**Hexagonal Axle Assy.**
1	SM-114B	Hexagonal Axle w/Bearing
2	BE-004	NiNjA Bearing (one each)
3	ME-741A	Axle Sleeve w/Allen Screws
F	**SM-113A**	**Hexagonal Axle Assy.**
1	SM-113	Hexagonal Axle ONLY
2	WS-49	Washer
3	BE-004	NiNjA Bearing (one each)
4	ME-506	Bearing Spacer
5	ME-741A	Axle Sleeve w/Allen Screws
G	**AD-034A**	**Aluminum Wheel Assy. Complete**
1	SC-327H	Flat-Head Screw
2	PR-546	Slider Bracket
3	NU-10	Hexagonal Nut
4	FE-40C	Felt
5	SB-66	Allen Screw (one each)
H		**Interchangeable Cam**
1	CAMT-BK	Black Cam
2	CAMT-WT	White Cam
3	CAMT-BL	Blue Cam
4	CAMT-RD	Red Cam
I	**CCA-5**	**Double Chain Assy. Complete / P-2052C**
1	DC-511AA	Chain Connecting Bracket Assy. (Top)
1-A	DC-511A	Chain Connecting Bracket ONLY (Top)
1-B	KB-508	Key Bolt
1-C	ME-244	Chain End Connector Assy.
2	DC-511BA	Chain Connecting Bracket Assy. (Bottom)
2-A	DC-511B	Chain Connecting Bracket ONLY (Bottom)
2-B	SC-357	Screw
2-C	SC-284	Screw (one each)
2-D	ME-244	Chain End Connector Assy.
I'	**BCA-250**	**Belt Assy. Complete / P-2052B**
1	KB-512	Key Bolt (long)
2	DC-510BA	End Connector Assy. (Bottom)
2-A	DC-510B	End Connector ONLY
2-B	SC-357W	Screw w/Washer
2-C	SC-287W	Screw w/Washer (one each)
J	**DC-714A**	**Uni-Lock Footboard Angle Cam Complete**
1	KB-630DA	Bolt & Nut Set
J'	**DC-714A**	**Uni-Lock Footboard Angle Cam Complete**
1	KB-630DA	Bolt & Nut Set
K	**SPA-64D**	**Spring Assy. Complete**
1	SP-64NF	Spring (w/Felt) ONLY
2	DC-724A	Adjustment Bolt Assy.
2-A	SC-259A	Bolt & Collar Set
3	NP-470	Upper Nut
4	ME-792	Spacer
5	DC-723	Lower Nut
L	**FB-2050A**	**Footboard Assy. Complete**
1	AL-24GA	Traction Plate Assy.
1-A	SC-363L	Mounting Screw (one each)
1-B	NP-283RV	Traction Grip (one each)
2	DC-508A	Toe Stopper Assy.
2-A	KB-508	Key Bolt
3	SC-261	Screw (one each)
4	ZD-041	Heel Position Adjust Nut
5	KB-608	Key Bolt
6	AD-032A	Footboard Assy. ONLY
M	**PR-549A**	**Power Plate Assy. Complete (Right Side)**
1	SC-325R	Screw
2	SC-149	Screw (one each)
3	NP-284L	Rubber Mat (Front)
4	NP-285	Rubber Mat (Heel)
N	**DC-399W**	**Hoop Clamp Cam Assy. Complete**
1	UGB-820C	Die-Cast Wing Bolt
2	SC-191BN	Screw (one each)
N'	**DC-399S**	**Hoop Clamp Cam Assy. Complete**
1	UGB-820C	Die-Cast Wing Bolt
2	SC-191BN	Screw (one each)
O	**DS-230A**	**Drive Shaft Assy. Complete**
1	SP-604A	Drive Shaft Sleeve w/Key Bolts
1-A	KB-608D	Key Bolt (one each)
2	HS-230A	Hexagonal Drive Shaft w/Key Bolts (one set)
2-A	KB-508D	Key Bolt (one each)
P	**DC-513VA**	**Pedal Frame w/Hoop Clamp**
1	DC-514VCA	Hoop Clamp Assy.
1-A	SM-119A	Adjustment Knob Assy.
1-B	ME-507	Pivot Block
1-C	SG-001	Spring
Q	**SM-028A**	**Hexagonal Axle Assy.**
1	SM-028	Hexagonal Axle ONLY
2	ME-741A	Axle Sleeve w/Allen Screws
3	BE-004	NiNjA Bearing (one each)
4	BSA-3	End Nut w/Washer
R	**PWP-200SA**	**Power Plate Assy. Complete (Left Side)**
1	SC-325R	Screw
2	SC-149	Screw (one each)
3	NP-284S	Rubber Mat (Front)
4	NP-285	Rubber Mat (Heel)

DRUM PEDALS

P-3000D / 3002D

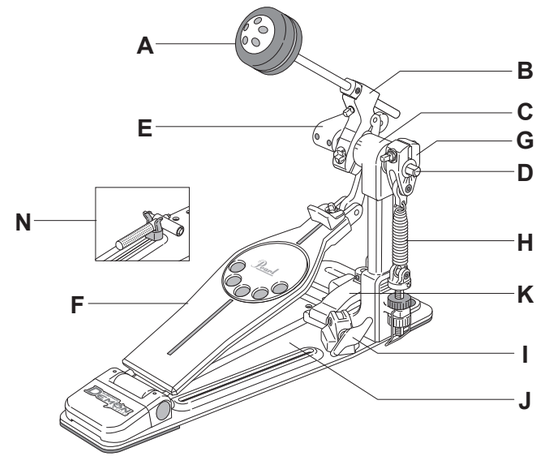

P-3000D

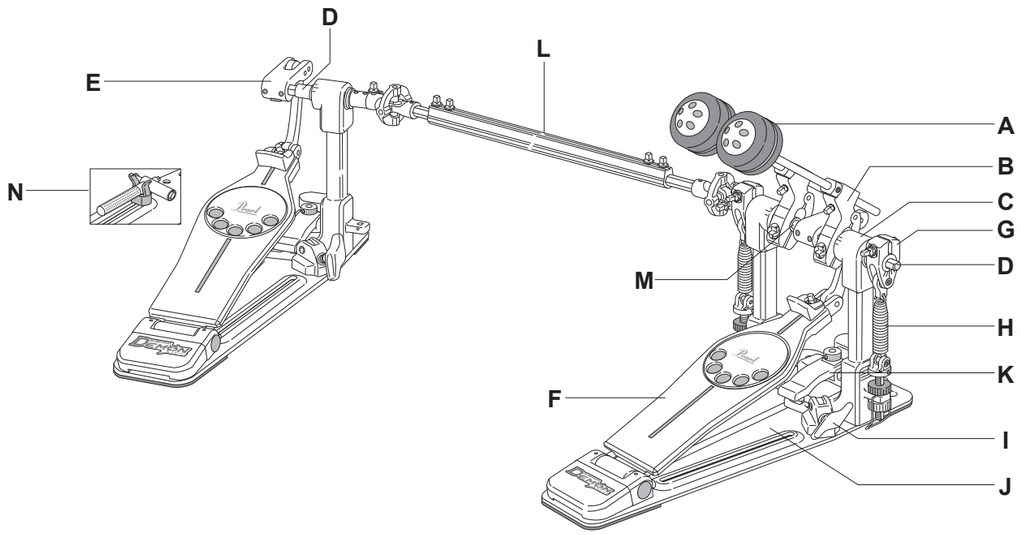

P-3002D

A

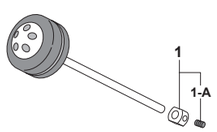

B

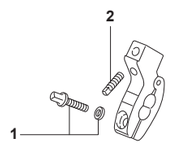

C

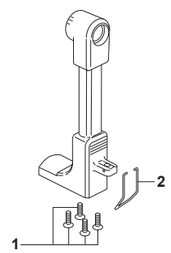

L

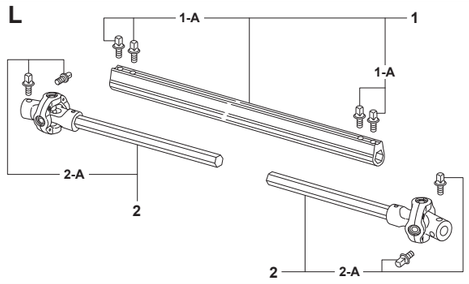

E

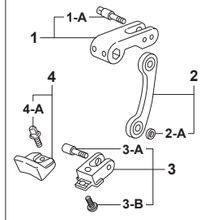

M

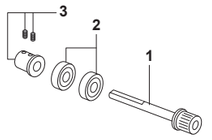

D

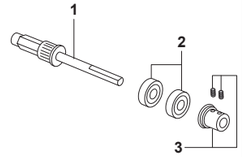

K

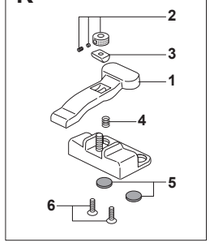

F

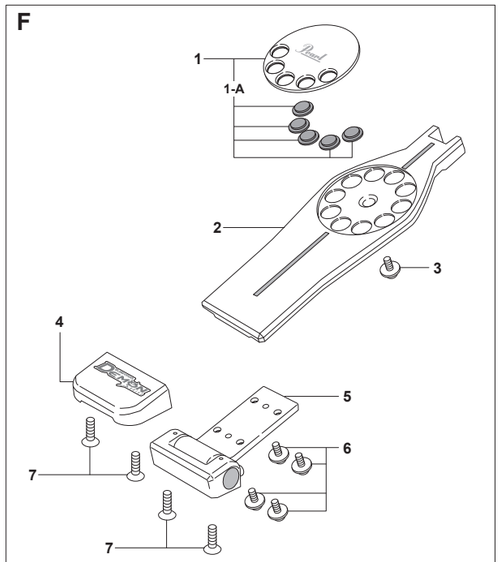

G

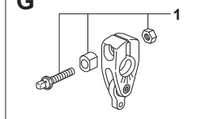

H

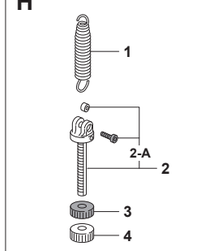

I

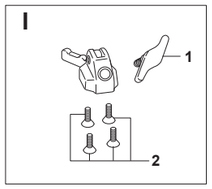

J

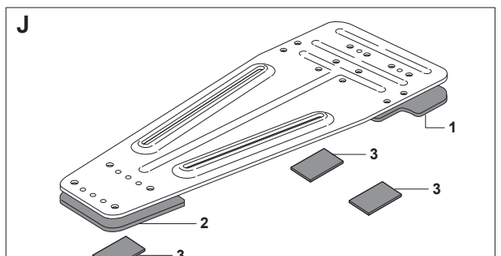

N

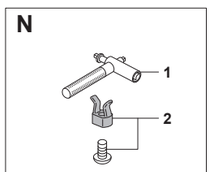

A	**B-300F**	**Control Core Felt Beater**
	B-300W	**Control Core Wood Beater (Option)**
1	ME-732A	Beater Setting Stopper Assy.
1-A	SB-65	Allen Screw
B	**DC-717ULA**	**Beater Holder Link Complete**
1	KB-623DW	Key Bolt w/Washer
2	SC-415	Key Bolt
C	**DC-716A**	**Pedal Post**
1	SC-366SC	Screw (one each)
2	SG-014	Click Lock Lever
D	**SFT-DL**	**Hexagonal Axle Shaft Assy.**
1	ME-738NA	Hexagonal Axle ONLY
2	NU-48	NiNjA Bearing (one each)
3	ME-741A	Axle Sleeve w/Allen Screws
E	**DRL-300TSA**	**Direct Link Assy. Complete**
1	DC-715UA	Direct Link Connecting Bracket Assy. (Top)
1-A	ME-731UNN	Key Bolt
2	DC-715LA	Direct Link Connecting Bar
2-A	ME-729	Spacer
3	DC-709NA	Direct Link Connecting Bracket Assy. (Bottom)
3-A	ME-731L	Bolt
3-B	SC-357	Screw
4	DC-746A	Toe Stopper Assy.
4-A	KB-508	Key Bolt
F	**FB-300A**	**Footboard Assy. Complete**
1	DC-721A	Traction Plate Assy.
1-A	ME-728	Traction Grip (one each)
2	DC-722	Footboard ONLY
3	SC-421W	Screw w/Washers
4	DC-720BAD	Heel Plate w/Logo Plate
5	DC-720FA	Hinge Assy.
6	SC-421W	Screw w/Washers (one each)
7	SC-418	Screw (one each)
G	**DC-714A**	**Uni-Lock Footboard Angle Cam Complete**
1	KB-630DA	Bolt & Nut Set
H	**SPA-64D**	**Spring Assy. Complete**
1	SP-64NF	Spring (w/Felt) ONLY
2	DC-724A	Adjustment Bolt Assy.
2-A	SC-259A	Bolt & Collar Set
3	NP-470	Upper Nut
4	DC-723	Lower Nut
I	**DC-399D**	**Hoop Clamp Lever Assy.**
1	UGB-820C	Die-Cast Wing Bolt
2	SC-367SC	Flat-Head Screw (one each)
J	**PR-672A**	**Bottom Plate**
1	NP-467A	Rubber Mat w/Adhesive Tape (Front)
2	NP-468A	Rubber Mat w/Adhesive Tape (Heel)
3	NP-474	Velcro Tape (one each)
K	**DC-719A**	**Hoop Clamp Assy.**
1	DC-718A	Hoop Clamp Bar w/Rubber Grip
2	SM-119A	Adjustment Knob Assy.
3	ME-507	Pivot Block
4	SP-77	Spring
5	NP-464	Rubber Grip (one each)
6	SC-366SC	Flat-Head Screw (one each)
L	**DS-300A**	**Drive Shaft Assy. Complete**
1	SP-65D	Drive Shaft Sleeve w/Key Bolts
1-A	KB-608D	Key Bolt (one each)
2	SP-602CCA	Hexagonal Drive Shaft w/Key Bolts (one set)
2-A	KB-508D	Key Bolt (one each)
M	**SFT-DS**	**Axle Shaft Assy.**
1	ME-739NA	Axle Shaft ONLY
2	NU-48	NiNjA Bearing (one each)
3	ME-741A	Axle Sleeve w/Allen Screws
N	**KMF-300A**	**Multi Function Drum Key Dock Assy.**
1	KMF-300	Multi Function Drum Key ONLY
2	NP-469A	Docking Assy.

DRUM PEDALS

P-3000C / 3002C

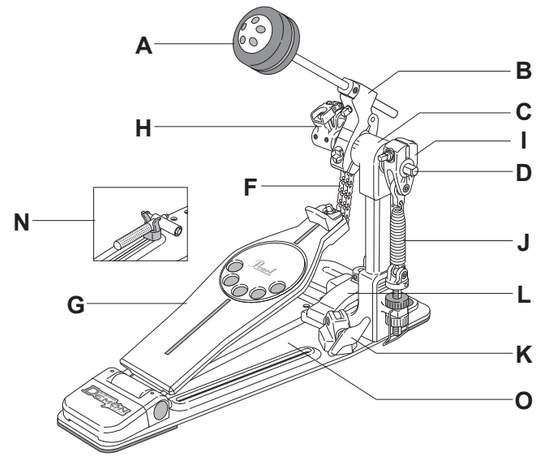

P-3000C

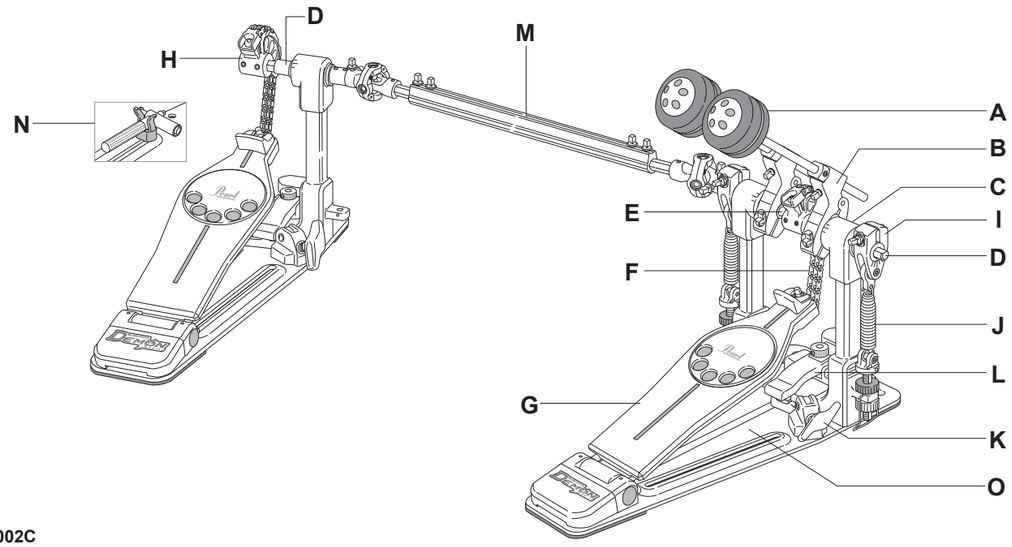

P-3002C

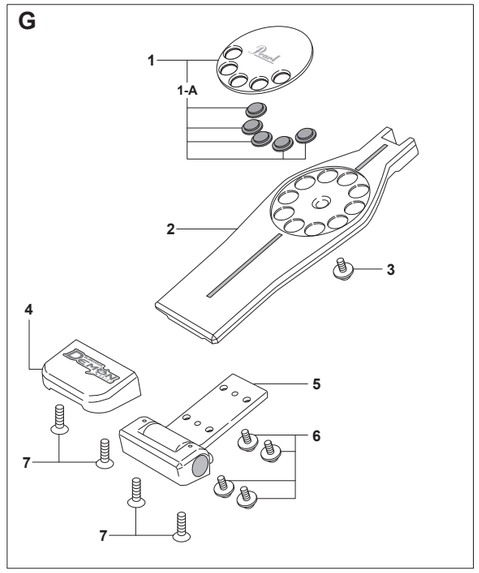

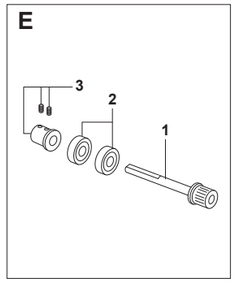

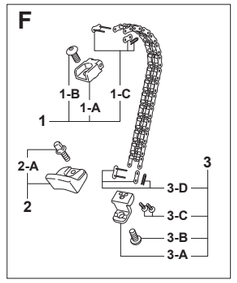

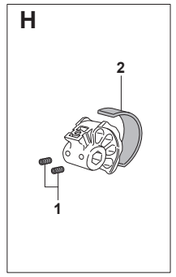

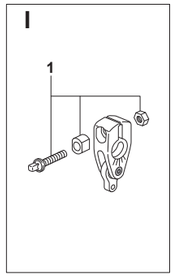

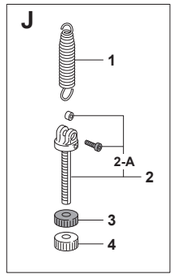

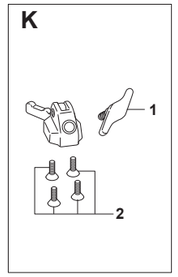

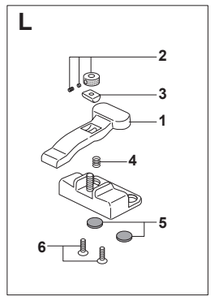

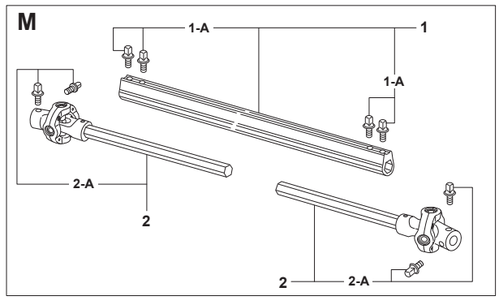

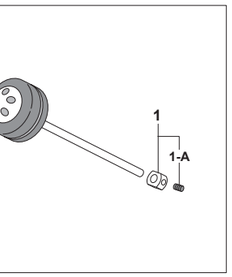

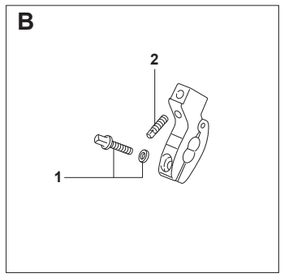

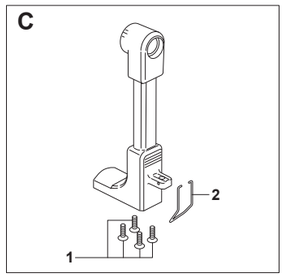

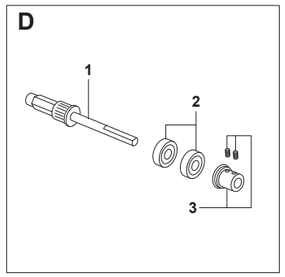

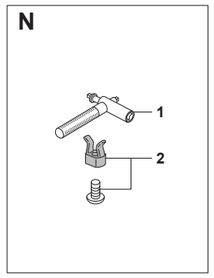

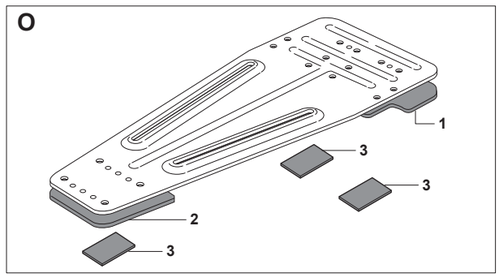

A	**B-300F**	**Control Core Felt Beater**
	B-300W	**Control Core Wood Beater (Option)**
1	ME-732A	Beater Setting Stopper Assy.
1-A	SB-65	Allen Screw
B	**DC-717ULA**	**Beater Holder Link Complete**
1	KB-623DW	Key Bolt w/Washer
2	SC-415	Key Bolt
C	**DC-716A**	**Pedal Post**
1	SC-366SC	Screw (one each)
2	SG-014	Click Lock Lever
D	**SFT-DL**	**Hexagonal Axle Shaft Assy.**
1	ME-738NA	Hexagonal Axle ONLY
2	NU-48	NiNjA Bearing (one each)
3	ME-741A	Axle Sleeve w/Allen Screws
E	**SFT-DS**	**Axle Shaft Assy.**
1	ME-739NA	Axle Shaft ONLY
2	NU-48	NiNjA Bearing (one each)
3	ME-741A	Axle Sleeve w/Allen Screws
F	**CCA-300**	**Double Chain Assy. Complete**
1	DC-511ACA	Chain Connecting Bracket Assy. (Top)
1-A	DC-511A	Chain Connecting Bracket ONLY (Top)
1-B	SC-468	Button Bolt
1-C	ME-803	Chain End Connector Assy.
2	DC-746A	Toe Stopper Assy.
2-A	KB-508	Key Bolt
3	DC-747A	Chain Connecting Bracket Assy. (Bottom)
3-A	DC-747	Chain Connecting Bracket ONLY (Bottom)
3-B	SC-357	Button Bolt
3-C	SC-284	Screw (one each)
3-D	ME-803	Chain End Connector Assy.
G	**FB-300AC**	**Footboard Assy. Complete**
1	DC-721A	Traction Plate Assy.
1-A	ME-728	Traction Grip (one each)
2	DC-722	Footboard ONLY
3	SC-421W	Screw w/Washers
4	DC-720BAC	Heel Plate w/Logo Plate
5	DC-720FA	Hinge Assy.
6	SC-421W	Screw w/Washers (one each)
7	SC-418	Screw (one each)
H	**DC-748A**	**Aluminum Wheel Assy. Complete**
1	SC-435	Allen Screw (one each)
2	FE-40LN	Felt Strip
I	**DC-714A**	**Uni-Lock Footboard Angle Cam Complete**
1	KB-630DA	Bolt & Nut Set
J	**SPA-64D**	**Spring Assy. Complete**
1	SP-64NF	Spring (w/Felt) ONLY
2	DC-724A	Adjustment Bolt Assy.
2-A	SC-259A	Bolt & Collar Set
3	NP-470	Upper Nut
4	DC-723	Lower Nut
K	**DC-399D**	**Hoop Clamp Lever Assy.**
1	UGB-820C	Die-Cast Wing Bolt
2	SC-367SC	Flat-Head Screw (one each)
L	**DC-719A**	**Hoop Clamp Assy.**
1	DC-718A	Hoop Clamp Bar w/Rubber Grip
2	SM-119A	Adjustment Knob Assy.
3	ME-507	Pivot Block
4	SP-77	Spring
5	NP-464	Rubber Grip (one each)
6	SC-366SC	Flat-Head Screw (one each)
M	**DS-300A**	**Drive Shaft Assy. Complete**
1	SP-65D	Drive Shaft Sleeve w/Key Bolts
1-A	KB-608D	Key Bolt (one each)
2	SP-602CCA	Hexagonal Drive Shaft w/Key Bolts (one set)
2-A	KB-508D	Key Bolt (one each)
N	**KMF-300A**	**Multi Function Drum Key Dock Assy.**
1	KMF-300	Multi Function Drum Key ONLY
2	NP-469A	Docking Assy.
O	**PR-672A**	**Bottom Plate**
1	NP-467A	Rubber Mat w/Adhesive Tape (Front)
2	NP-468A	Rubber Mat w/Adhesive Tape (Heel)
3	NP-474	Velcro Tape (one each)

P-2050C / 2050B

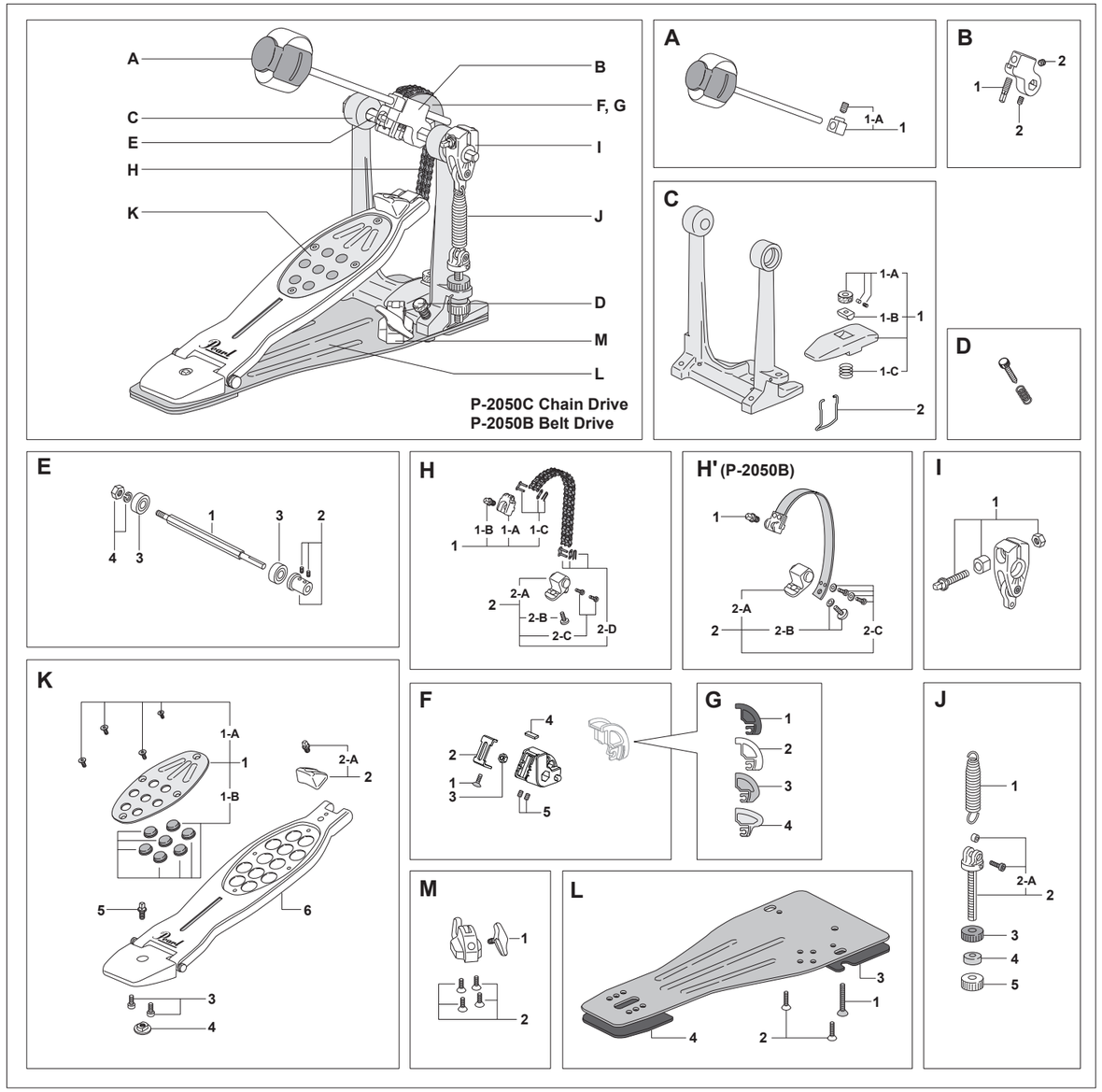

A	**B-250QB**	**Quad Beater Complete**
1	AD-044A	Beater Setting Stopper Assy.
1-A	SB-66	Allen Screw
B	**AD-035A**	**Beater Holder Link Complete**
1	KB-814	Key Bolt
2	SB-66	Allen Screw (one each)
C	**DC-513VA**	**Pedal Frame w/Hoop Clamp**
1	DC-514VCA	Hoop Clamp Assy.
1-A	SM-119A	Adjustment Knob Assy.
1-B	ME-507	Pivot Block
1-C	SG-001	Spring
2	SP-82	Click Lock Lever
D	**LT-636**	**Anchor Screw w/Spring**
E	**SM-028A**	**Hexagonal Axle Assy.**
1	SM-028	Hexagonal Axle ONLY
2	ME-741A	Axle Sleeve w/Allen Screws
3	BE-004	NiNjA Bearing (one each)
4	BSA-3	End Nut w/Washer
F	**AD-034A**	**Aluminum Wheel Assy. Complete**
1	SC-327H	Flat-Head Screw
2	PR-546	Slider Bracket
3	NU-10	Hexagonal Nut
4	FE-40C	Felt
5	SB-66	Allen Screw (one each)

G		**Interchangeable Cam**
1	CAMT-BK	Black Cam
2	CAMT-WT	White Cam
3	CAMT-BL	Blue Cam
4	CAMT-RD	Red Cam
H	**CCA-5**	**Double Chain Assy. Complete / P-2050C**
1	DC-511AA	Chain Connecting Bracket Assy. (Top)
1-A	DC-511A	Chain Connecting Bracket ONLY (Top)
1-B	KB-508	Key Bolt
1-C	ME-244	Chain End Connector Assy.
2	DC-511BA	Chain Connecting Bracket Assy. (Bottom)
2-A	DC-511B	Chain Connecting Bracket ONLY (Bottom)
2-B	SC-357	Screw
2-C	SC-284	Screw (one each)
2-D	ME-244	Chain End Connector Assy.
H'	**BCA-250**	**Belt Assy. Complete / P-2050B**
1	KB-512	Key Bolt (long)
2	DC-510BA	End Connector Assy. (Bottom)
2-A	DC-510B	End Connector ONLY
2-B	SC-357W	Screw w/Washer
2-C	SC-287W	Screw w/Washer (one each)
I	**DC-714A**	**Uni-Lock Footboard Angle Cam Complete**
1	KB-630DA	Bolt & Nut Set

J	**SPA-64D**	**Spring Assy. Complete**
1	SP-64NF	Spring (w/Felt) ONLY
2	DC-724A	Adjustment Bolt Assy.
2-A	SC-259A	Bolt & Collar Set
3	NP-470	Upper Nut
4	ME-792	Spacer
5	DC-723	Lower Nut
K	**FB-2050A**	**Footboard Assy. Complete**
1	AL-24GA	Traction Plate Assy.
1-A	SC-363L	Mounting Screw (one each)
1-B	NP-283RV	Traction Grip (one each)
2	DC-508A	Toe Stopper Assy.
2-A	KB-508	Key Bolt
3	SC-261	Screw (one each)
4	ZD-041	Heel Position Adjust Nut
5	KB-608	Key Bolt
6	AD-032A	Footboard Assy. ONLY
L	**PWP-200SA**	**Power Plate Assy. Complete**
1	SC-325R	Screw
2	SC-149	Screw (one each)
3	NP-284S	Rubber Mat (Front)
4	NP-285	Rubber Mat (Heel)
M	**DC-399S**	**Hoop Clamp Cam Assy. Complete**
1	UGB-820C	Die-Cast Wing Bolt
2	SC-191BN	Screw (one each)

H-150S

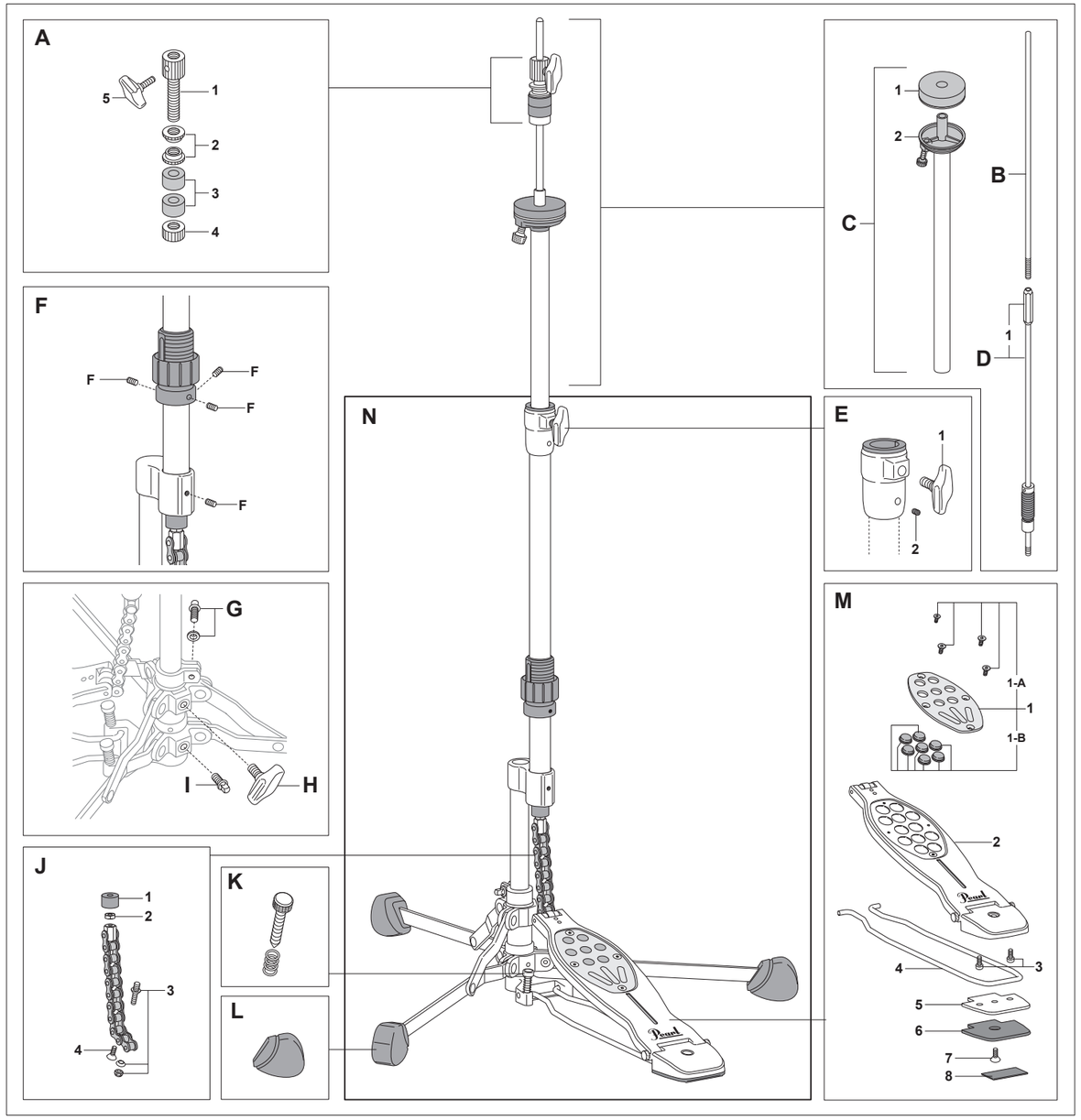

A	**HCL-90**	**Hi-Hat Clutch Complete**
1	SM-011	Pipe Bolt
2	AM-001	Lock Nut (one each)
3	FLW-007	Felt Washer (one each)
4	AM-002	Bottom Lock Nut
5	UGB-610	Die-Cast Wing Bolt
B	**SM-012S**	**Upper Pull Rod**
C	**UT-H15S**	**Upper Tube Assy. Complete**
1	FLW-009SW	Felt Washer w/Steel Washer
2	HHC-79	Plastic Cup w/Tilter.
D	**LPR-150**	**Lower Pull Rod Complete**
1	SM-116	Pull Rod Connector ONLY

E	**PJ-70**	**Die-Cast Joint Assy. Complete**
1	UGB-815S	Die-Cast Wing Bolt
2	SB-44	Allen Screw
F	**SB-55**	**Allen Screw (one each)**
G	**KB-615WS**	**Key Bolt w/Washer**
H	**UGB-815S**	**Die-Cast Wing Bolt**
I	**KB-814**	**Key Bolt**
J	**LC-15S**	**Pull Rod Link Assy.**
1	RB-017	Rubber Washer
2	NU-19	Nut
3	SM-110A	Chain-Link Post Assy.
4	SC-366SC	Screw

K	**LT-636S**	**Anchor Screw w/Spring**
L	**NP-454N**	**Rubber Tip (one each)**
M	**FB-150SHA**	**Footboard Assy. Complete**
1	AL-24GA	Traction Plate Assy.
1-A	SC-363L	Mounting Screw (one each)
1-B	NP-283RV	Traction Grip (one each)
2	AD-032SA	Footboard Assy. ONLY
3	SC-261	Screw (one each)
4	RR-150	Radius Rod
5	RRC-90	Radius Rod Cover
6	NP-387	Rubber Mat
7	SC-258	Screw
8	NP-474	Velcro Tape
N	**BA-H15S**	**Base Assy. Complete**

HI-HAT STANDS

H-830

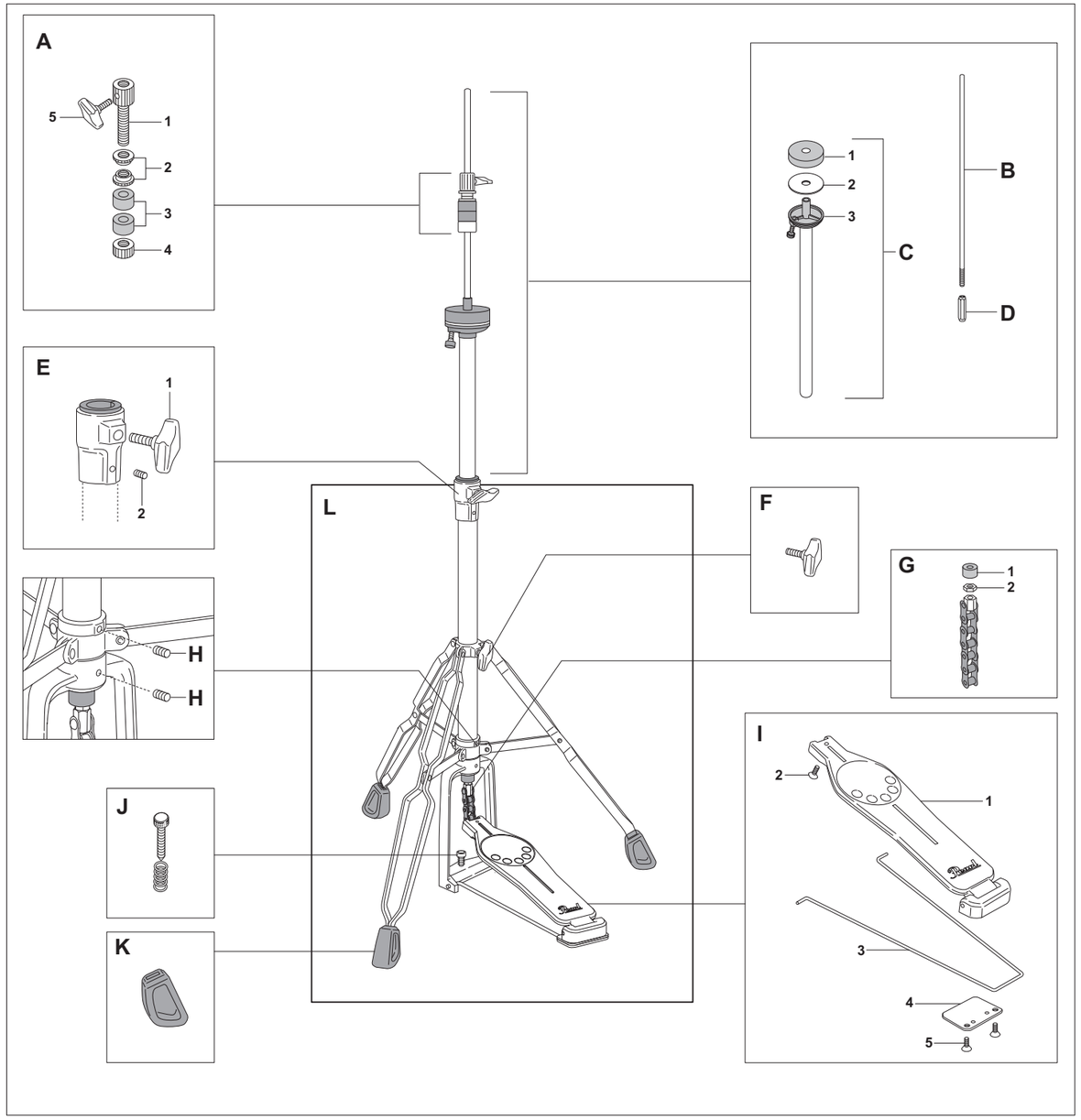

A	**HCL-79**	**Hi-Hat Clutch Complete**
1	SM-011	Pipe Bolt
2	AM-001	Lock Nut (one each)
3	FE-10	Felt Washer (one each)
4	AM-002	Bottom Lock Nut
5	UGB-610	Die-Cast Wing Bolt
B	**SM-012**	**Upper Pull Rod**
C	**UT-H83**	**Upper Tube Assy. Complete**
1	FE-33	Felt Washer
2	HCW-90	Steel Washer
3	HHC-90	Plastic Cup w/Tilter
D	**ME-42N**	**Pull Rod Connector ONLY**
E	**PJ-83L**	**Die-Cast Joint Assy. Complete**
1	UGB-815S	Die-Cast Wing Bolt
2	SB-44	Allen Screw
F	**UGB-815S**	**Die-Cast Wing Bolt**
G	**LC-93**	**Pull Rod Link Assy.**
1	RB-017	Rubber Washer
2	NU-19	Nut
H	**SB-55**	**Allen Screw**
I	**FB-930UHA**	**Footboard Assy. Complete**
1	FB-930U	Footboard ONLY
2	SC-367	Screw
3	RR-93	Radius Rod
4	STL-2	Radius Rod Cover
5	SC-366SC	Screw (one each)
J	**LT-626**	**Anchor Screw w/Spring**
K	**RB-022**	**Rubber Tip (one each)**
L	**BA-H83**	**Base Assy. Complete**

HI-HAT STANDS

H–930

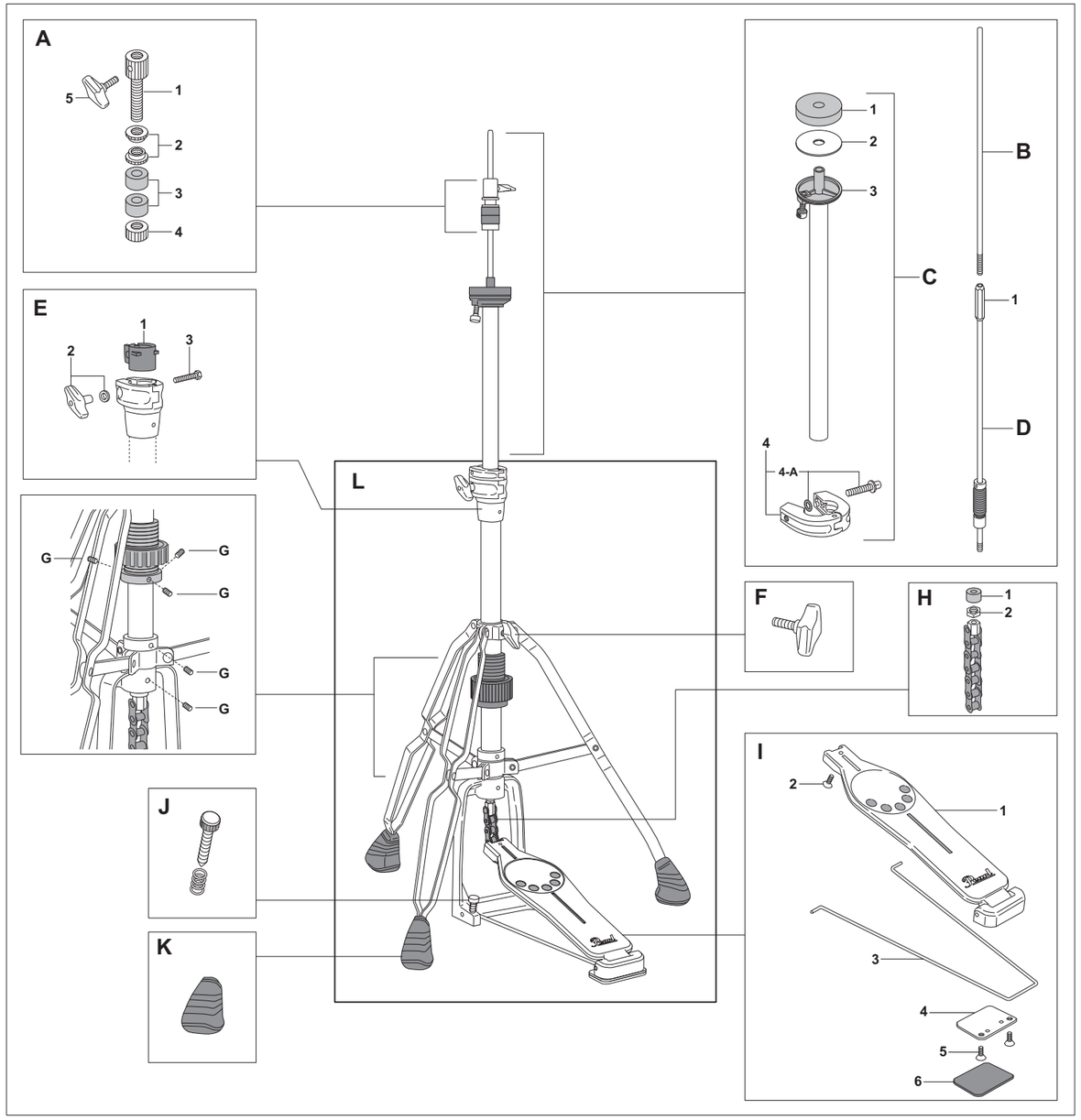

A	**HCL-90**	**Hi-Hat Clutch Complete**
1	SM-011	Pipe Bolt
2	AM-001	Lock Nut (one each)
3	FLW-007	Felt Washer (one each)
4	AM-002	Bottom Lock Nut
5	UGB-610	Die-Cast Wing Bolt
B	**SM-012**	**Upper Pull Rod**
C	**UT-H93**	**Upper Tube Assy. Complete**
1	FLW-003	Felt Washer
2	HCW-90	Steel Washer
3	HHC-90	Plastic Cup w/Tilter
4	ZD-104A	Stop Lock Complete
4-A	KB-625O	Key Bolt w/O-Ring
D	**LPR-90**	**Lower Pull Rod Complete**
1	SM-116	Pull Rod Connector ONLY
E	**PJ-100L**	**Die-Cast Joint Assy. Complete**
1	NP-366	Nylon Bushing
2	UGN-6	Die-Cast Wing Nut w/Washer
3	SC-169	Clamp Bolt
F	**UGB-815S**	**Die-Cast Wing Bolt**
G	**SB-55**	**Allen Screw (one each)**
H	**LC-93**	**Pull Rod Link Assy.**
1	RB-017	Rubber Washer
2	NU-19	Nut
I	**FB-930HA**	**Footboard Assy. Complete**
1	FB-930	Footboard ONLY
2	SC-367	Screw
3	RR-93	Radius Rod
4	STL-2	Radius Rod Cover
5	SC-366SC	Screw (one each)
6	RB-018	Rubber Mat
J	**LT-626**	**Anchor Screw w/Spring**
K	**RB-008**	**Rubber Tip (one each)**
L	**BA-H93**	**Base Assy. Complete**

HI-HAT STANDS

H-1050

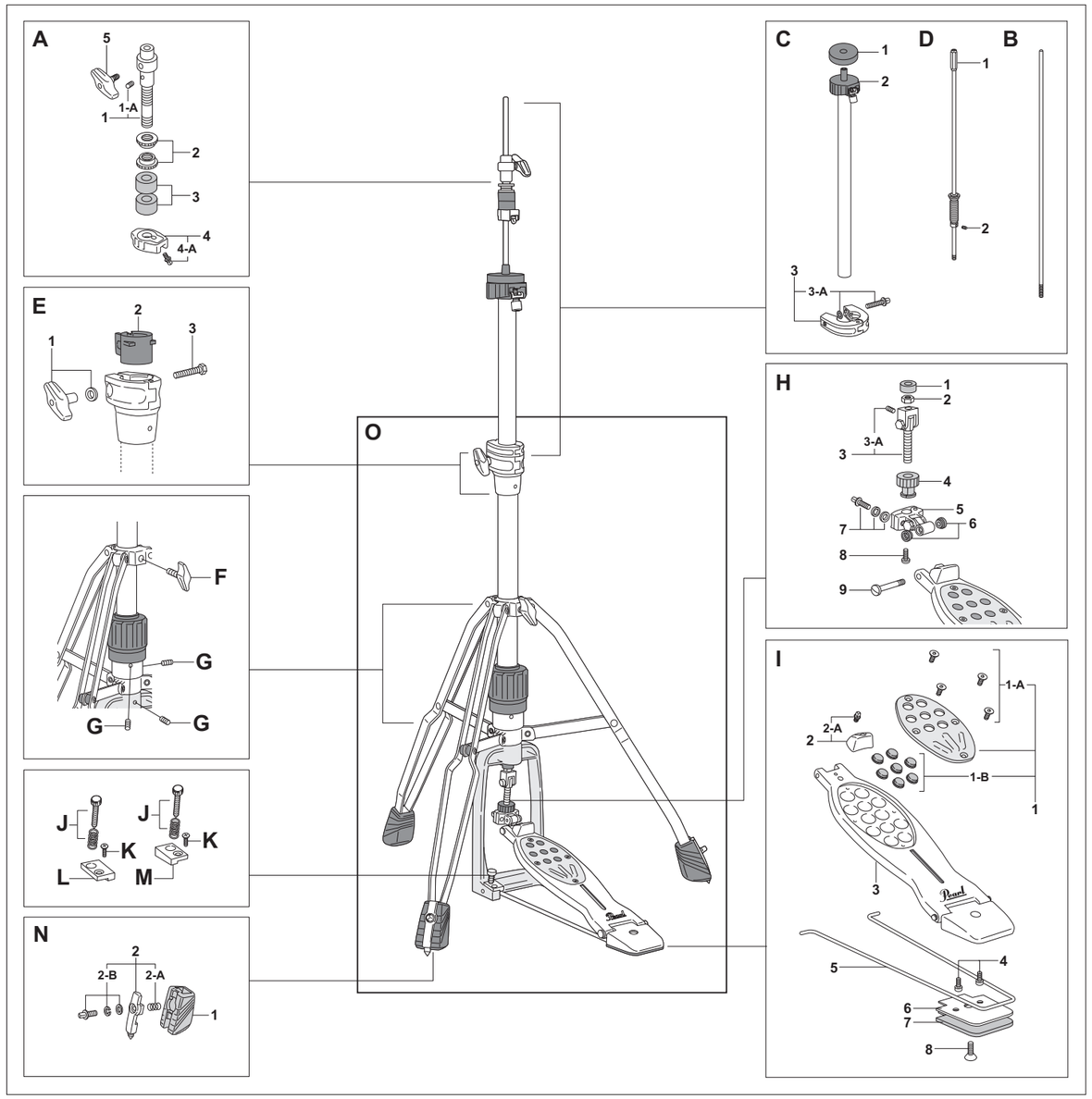

A	**CL-300**	**Hi-Hat Clutch Complete**
1	ME-574AC	Pipe Bolt
1-A	SB-44	Allen Screw
2	AM-001	Lock Nut (one each)
3	FLW-007	Felt Washer (one each)
4	DC-554A	Bottom Lock Nut Complete
4-A	KB-610	Key Bolt
5	UGB-610	Die-Cast Wing Bolt
B	**SM-012**	**Upper Pull Rod**
C	**HUP-105**	**Upper Tube Assy. Complete**
1	FLW-003	Felt Washer
2	HHC-20	Plastic Cup w/Tilter
3	ZD-102A	Stop Lock Complete
3-A	KB-625O	Key Bolt w/O-Ring
D	**LS-200**	**Lower Pull Rod Complete**
1	SM-116	Pull Rod Connector ONLY
2	SB-44	Allen Screw
E	**PJ-100H**	**Die-Cast Joint Assy. Complete**
1	UGN-6	Die-Cast Wing Nut w/Washer
2	NP-365	Nylon Bushing
3	SC-169	Clamp Bolt
F	**UGB-815S**	**Die-Cast Wing Bolt**
G	**SB-55**	**Allen Screw (one each)**

H	**FCA-100**	**Pedal Link Complete**
1	RB-004	Rubber Washer
2	NU-19	Nut
3	DC-558AC	Upper Link Assy.
3-A	SB-44	Allen Screw
4	NP-353	Height Adjuster
5	DC-556AC	Lower Link Assy.
6	NP-352	Nylon Spacer (one each)
7	KB-615W	Key Bolt w/Washers
8	SC-351	Screw
9	ME-569N	Pivot Bolt
I	**FB-1050HA**	**Footboard Assy. Complete**
1	AL-24GA	Traction Plate Assy.
1-A	SC-363L	Mounting Screw (one each)
1-B	NP-283RV	Traction Grip (one each)
2	DC-508A	Toe Stopper Assy.
2-A	KB-508	Key Bolt
3	AD-032HA	Footboard Assy. ONLY
4	SC-261	Screw (one each)
5	RR-90	Radius Rod
6	RRC-90	Radius Rod Cover
7	NP-387	Rubber Mat
8	SC-258	Screw

J	**LT-636**	**Anchor Screw w/Spring**
K	**SC-39**	**Screw (one each)**
L	**DC-557LF**	**Anchor Plate, Left**
M	**DC-557RF**	**Anchor Plate, Right**
N	**NP-427AC**	**Convertible Tip Assy. Complete**
1	NP-427	Rubber Tip ONLY
2	DC-523A	Spike Assy. Complete
2-A	SG-004	Spring
2-B	KB-625W	Key Bolt w/Washers
O	**BA-H105**	**Base Assy. Complete**

HI-HAT STANDS

H-2050

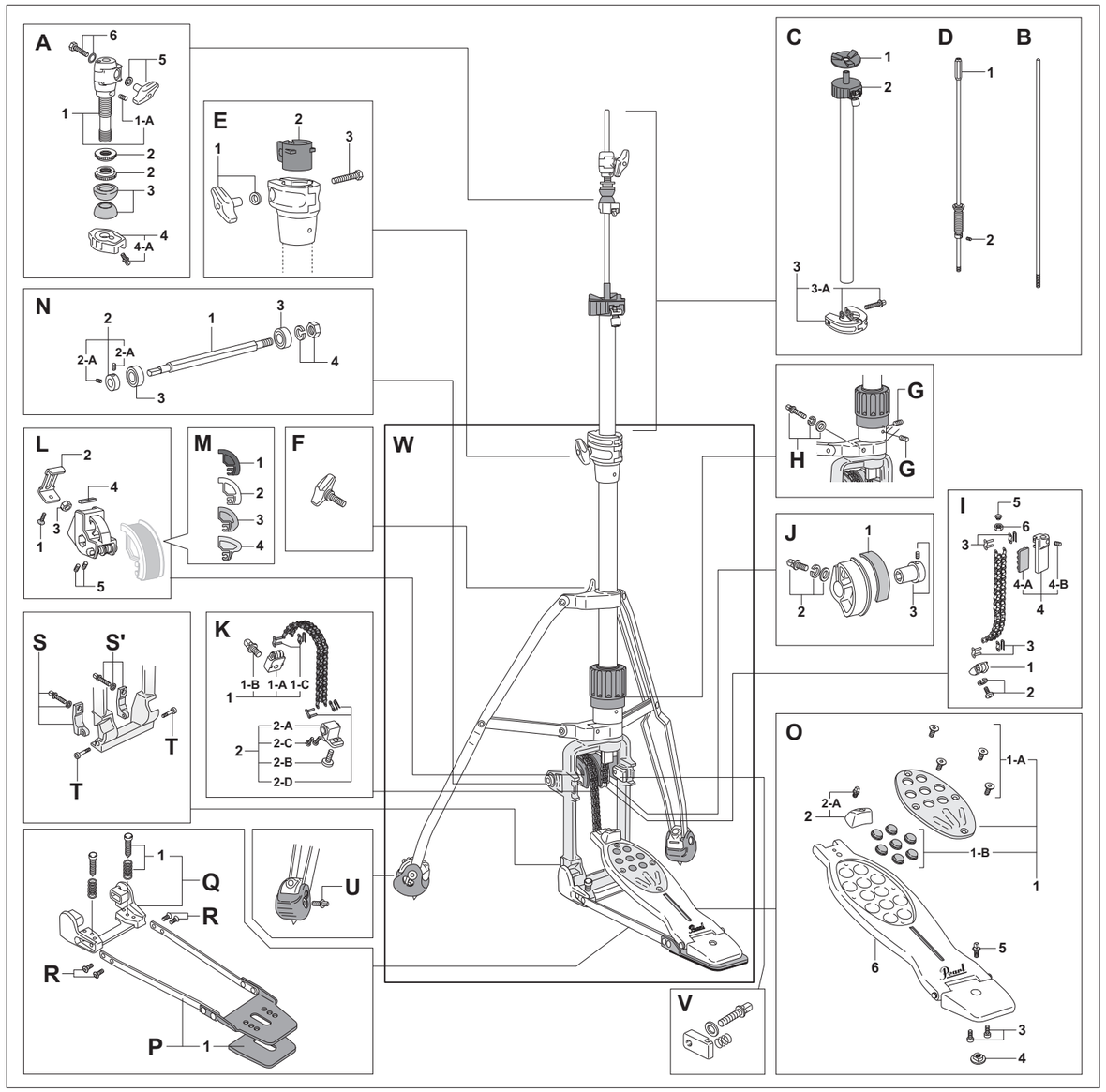

A	**SGC-300P**	**Super Grip Clutch**
1	DC-526A	Pipe Bolt
1-A	SB-44	Allen Screw
2	AM-001	Lock Nut (one each)
3	NP-210	Rubber Washer (one each)
4	DC-554A	Bottom Lock Nut Complete
4-A	KB-610	Key Bolt
5	UGN-6	Die-Cast Wing Nut w/Washer
6	SC-168O	Clamp Bolt w/O-Ring
B	**SM-012S**	**Upper Pull Rod**
C	**HUP-205**	**Upper Tube Assy. Complete**
1	NP-208	Rubber Cup Washer
2	HHC-20	Plastic Cup w/Tilter
3	ZD-102A	Stop Lock Complete
3-A	KB-625O	Key Bolt w/O-Ring
D	**LS-200**	**Lower Pull Rod Complete**
1	SM-116	Pull Rod Connector ONLY
2	SB-44	Allen Screw
E	**PJ-100H**	**Die-Cast Joint Assy. Complete**
1	UGN-6	Die-Cast Wing Nut w/Washer
2	NP-365	Nylon Bushing
3	SC-169	Clamp Bolt
F	**UGB-815S**	**Die-Cast Wing Bolt**
G	**SB-55**	**Allen Screw (one each)**
H	**KB-625W**	**Key Bolt w/Washers**
I	**CCA-6H**	**Chain Assy. Complete (pull cam side)**
1	DC-400	Chain Connector
2	SC-94W	Screw w/Washer
3	ME-244	Chain End Connector Assy. (one each)

4	DC-524A	Rod Connector, Complete
4-A	NP-296	Rubber Cushion
4-B	SB-44	Allen Screw
5	SG-013	Waggle Spring
6	NU-19	Nut
J	**DC-525NA**	**Aluminum Pull Cam Assy. Complete**
1	FE-41	Felt Strip
2	KB-625W	Key Bolt w/Washers
3	SM-098A	Drive Shaft Sleeve w/Allen Screw
K	**CCA-5H**	**Double Chain Assy. Complete**
1	DC-511AA	Chain Connecting Bracket Assy. (Top)
1-A	DC-511A	Chain Connecting Bracket ONLY (Top)
1-B	KB-508	Key Bolt
1-C	ME-244	Chain End Connector Assy.
2	DC-511BA	Chain Connecting Bracket Assy. (Bottom)
2-A	DC-511B	Chain Connecting Bracket ONLY (Bottom)
2-B	SC-357	Screw
2-C	SC-284	Screw (one each)
2-D	ME-244	Chain End Connector Assy.
L	**AD-034A**	**Aluminum Wheel Assy. Complete**
1	SC-327H	Flat-Head Screw
2	PR-546	Slider Bracket
3	NU-10	Hexagonal Nut
4	FE-40C	Felt
5	SB-66	Allen Screw (one each)
M		**Interchangeable Cam**
1	CAMT-BK	Black Cam
2	CAMT-WT	White Cam
3	CAMT-BL	Blue Cam
4	CAMT-RD	Red Cam

N	**SM-115A**	**Hexagonal Axle Assy.**
1	SM-115	Hexagonal Axle ONLY
2	ME-518A	Axle Sleeve w/Allen Screws
2-A	SB-44	Allen Screw (one each)
3	NU-07B	Bearing (one each)
4	BSA-3	End Nut w/Washer
O	**FB-2050HA**	**Footboard Assy. Complete**
1	AL-24GA	Traction Plate Assy.
1-A	SC-363L	Mounting Screw (one each)
1-B	NP-283RV	Traction Grip (one each)
2	DC-508A	Toe Stopper Assy.
2-A	KB-508	Key Bolt
3	SC-261	Screw (one each)
4	ZD-041	Heel Position Adjust Nut
5	KB-608	Key Bolt
6	AD-032A	Footboard Assy. ONLY
P	**PR-660F**	**Pedal Frame Assy. Complete**
1	NP-285	Rubber Mat
Q	**DC-701A**	**Frame Sleeve w/Screw**
1	LT-626	Anchor Screw w/Spring
R	**SC-39**	**Screw (one each)**
S	**DC-700VLA**	**Receiver Clamp w/Key Bolt & Washer - Left**
S'	**DC-700VRA**	**Receiver Clamp w/Key Bolt & Washer - Right**
T	**ME-712**	**Pivot Screw**
U	**KB-625**	**Key Bolt**
V	**DC-699A**	**Docking Station Clamp w/Key Bolt, Washer & Spring**
W	**BA-H205**	**Base Assy. Complete**

REMOTE HI-HAT

RH-2050

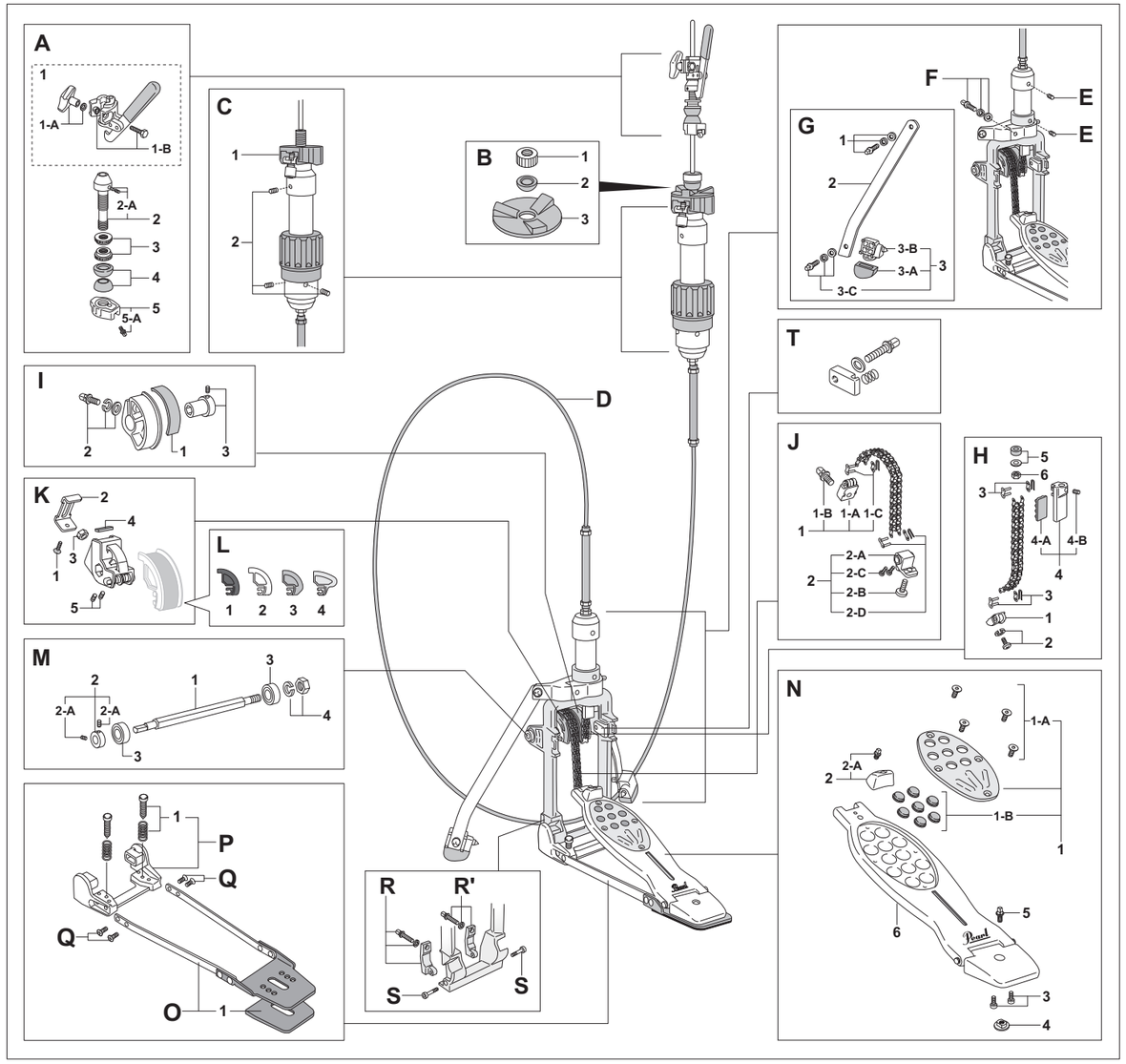

A	**DCL-300P**	**Drop Clutch**
1	DCL-300T	Drop Clutch Head Assy.
1-A	UGN-6	Die-Cast Wing Nut w/Washer
1-B	SC-168O	Clamp Bolt w/O-Ring
2	ME-642A	Drop Clutch Bolt
2-A	SB-55S	Allen Screw w/Spacer
3	AM-001	Lock Nut (one each)
4	NP-210	Rubber Washer (one each)
5	DC-554A	Bottom Lock Nut Complete
5-A	KB-610	Key Bolt
B	**CYS-200AA**	**Cymbal Seat Assy.**
1	ME-188	Lock Nut
2	NP-210	Rubber Washer
3	NP-208	Rubber Cup Washer
C	**HUP-200R**	**Upper Tube Assy. Complete**
1	HHC-20R	Plastic Cup w/Tilter
2	SB-55	Allen Screw (one each)
D	**CAU-2000**	**Cable Unit Complete, w/Nuts & Washers**
E	**SB-55**	**Allen Screw (one each)**
F	**KB-625W**	**Key Bolt w/Washers**
G	**PS-061A**	**Leg Assy. Complete**
1	KB-625W	Key Bolt w/Washers
2	PS-061	Leg ONLY
3	CT-88A	Convertible Tip Assy. Complete
3-A	R-8H	Rubber Tip (one each)
3-B	AN-88	Spike
3-C	KB-615W	Key Bolt w/Washers
H	**CCA-6RH**	**Chain Assy. Complete (pull cam side)**
1	DC-400	Chain Connector
2	SC-94W	Screw w/Washer
3	ME-244	Chain End Connector Assy. (one each)
4	DC-524A	Rod Connector, Complete
4-A	NP-296	Rubber Cushion
4-B	SB-44	Allen Screw
5	FE-42W	Felt Washer w/Washer
6	NU-19	Nut
I	**DC-525NA**	**Aluminum Pull Cam Assy. Complete**
1	FE-41	Felt Strip
2	KB-625W	Key Bolt w/Washers
3	SM-098A	Drive Shaft Sleeve w/Allen Screw
J	**CCA-5H**	**Double Chain Assy. Complete**
1	DC-511AA	Chain Connecting Bracket Assy. (Top)
1-A	DC-511A	Chain Connecting Bracket ONLY (Top)
1-B	KB-508	Key Bolt
1-C	ME-244	Chain End Connector Assy.
2	DC-511BA	Chain Connecting Bracket Assy. (Bottom)
2-A	DC-511B	Chain Connecting Bracket ONLY (Bottom)
2-B	SC-357	Screw
2-C	SC-284	Screw (one each)
2-D	ME-244	Chain End Connector Assy.
K	**AD-034A**	**Aluminum Wheel Assy. Complete**
1	SC-327H	Flat-Head Screw
2	PR-546	Slider Bracket
3	NU-10	Hexagonal Nut
4	FE-40C	Felt
5	SB-66	Allen Screw (one each)
L		**Interchangeable Cam**
1	CAMT-BK	Black Cam
2	CAMT-WT	White Cam
3	CAMT-BL	Blue Cam
4	CAMT-RD	Red Cam
M	**SM-115A**	**Hexagonal Axle Assy.**
1	SM-115	Hexagonal Axle ONLY
2	ME-518A	Axle Sleeve w/Allen Screws
2-A	SB-44	Allen Screw (one each)
3	NU-07B	Bearing (one each)
4	BSA-3	End Nut w/Washer
N	**FB-2050HA**	**Footboard Assy. Complete**
1	AL-24GA	Traction Plate Assy.
1-A	SC-363L	Mounting Screw (one each)
1-B	NP-283RV	Traction Grip (one each)
2	DC-508A	Toe Stopper Assy.
2-A	KB-508	Key Bolt
3	SC-261	Screw (one each)
4	ZD-041	Heel Position Adjust Nut
5	KB-608	Key Bolt
6	AD-032A	Footboard Assy. ONLY
O	**PR-660F**	**Pedal Frame Assy. Complete**
1	NP-285	Rubber Mat
P	**DC-701A**	**Frame Sleeve w/Screw**
1	LT-626	Anchor Screw w/Spring
Q	**SC-39**	**Screw (one each)**
R	**DC-700VLA**	**Receiver Clamp w/Key Bolt & Washer - Left**
R'	**DC-700VRA**	**Receiver Clamp w/Key Bolt & Washer - Right**
S	**ME-712**	**Pivot Screw**
T	**DC-699A**	**Docking Station Clamp w/Key Bolt, Washer & Spring**

HI-HAT ACCESSORIES

DCL-300P Drop Clutch

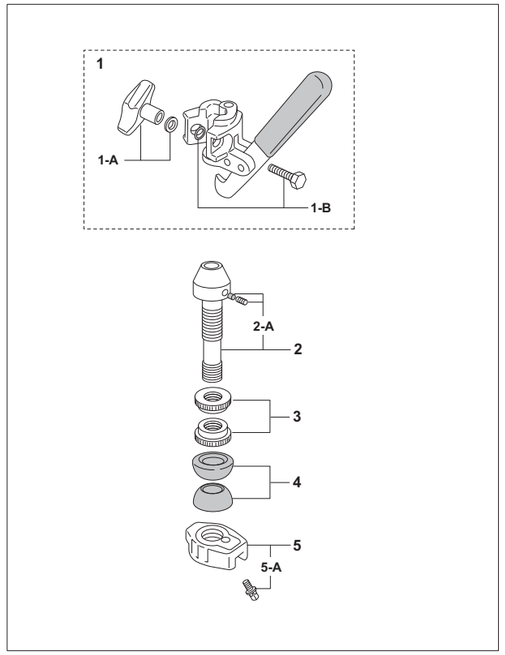

1	DCL-300T	Drop Clutch Head Assy.
1-A	UGN-6	Die-Cast Wing Nut w/Washer
1-B	SC-168O	Clamp Bolt w/O-Ring
2	ME-642A	Drop Clutch Bolt
2-A	SB-55S	Allen Screw w/Spacer
3	AM-001	Lock Nut (one each)
4	NP-210	Rubber Washer (one each)
5	DC-554A	Bottom Lock Nut Complete
5-A	KB-610	Key Bolt

HA-130 Hi-Hat Attachment

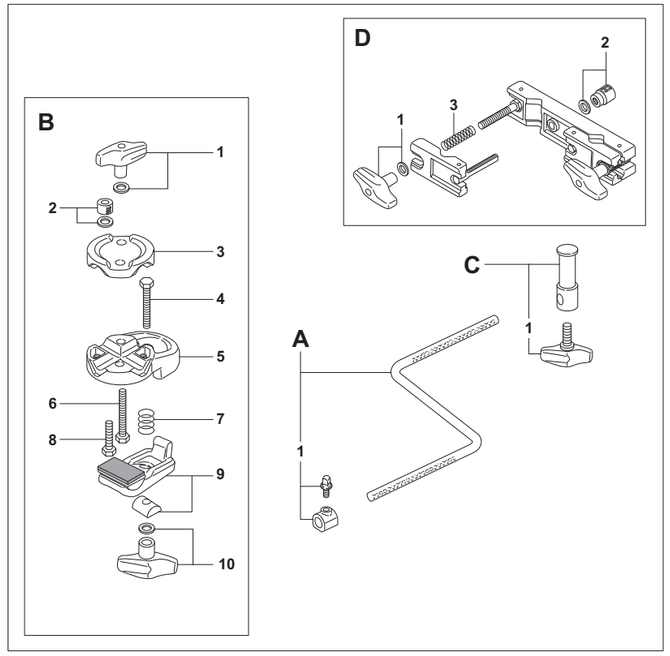

A	**SM-081A**	**Crank Rod Assy. Complete**
1	AD-031A	Stop Lock Complete
B	**HCP-130**	**Hoop Mount Assy. Complete**
1	UGN-6	Die-Cast Wing Nut w/Washer
2	SM-083A	Knurled Round Nut w/Washer
3	AD-028	Clamp Plate
4	SC-181	Clamp Bolt
5	AD-027A	Hoop Mount Holder
6	SC-181	Clamp Bolt
7	SG-006N	Spring
8	SC-168	Clamp Bolt
9	AD-029A	Hoop Clamp Assy.
10	UGN-6	Die-Cast Wing Nut w/Washer
C	**SM-082A**	**Crank Rod Bracket**
1	UGB-815	Wing Bolt
D	**ADP-20**	**Adaptor**
1	UGN-8	Die-Cast Wing Nut w/Washer (one set)
2	M-8RN	Knurled Round Nut w/Washer
3	SG-009	Spring

CLH-930

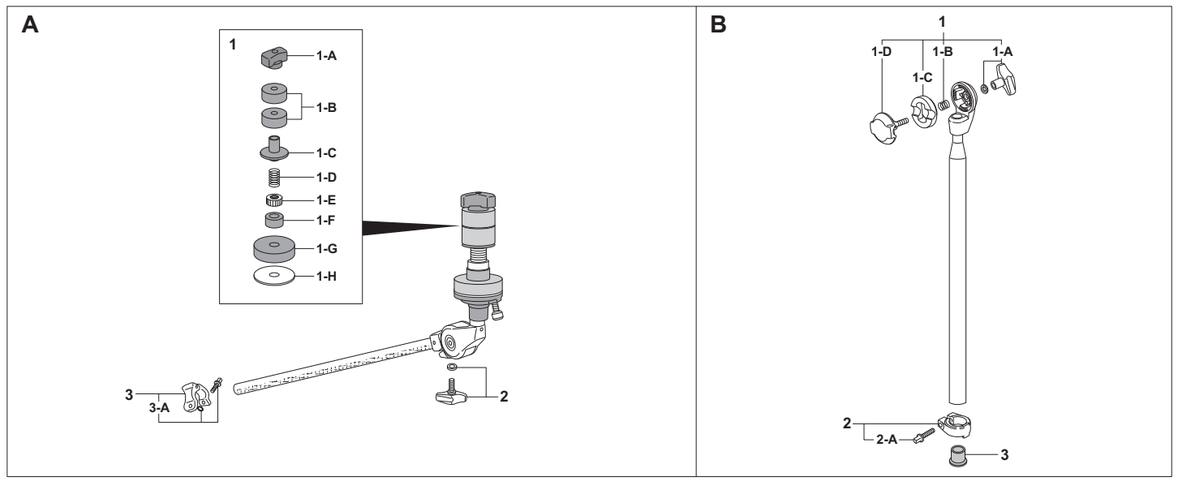

A	**AA-CLH93**	**Upper Section Assy. Complete**
1	UTS-CLH93	Top Section Assy.
1-A	PL-010	Plastic Cymbal Nut
1-B	FLW-001	Felt Washer (one each)
1-C	NP-123	Plastic Sleeve
1-D	SP-41	Spring
1-E	ME-188	Lock Nut
1-F	FLW-008	Felt Washer
1-G	FLW-003	Felt Washer
1-H	HCW-90	Steel Washer
2	UGB-830W	Die-Cast Wing Bolt w/Washer
3	DC-627AN	Stop Lock Complete
3-A	KB-615O	Key Bolt w/O-Ring
B	**UT-CH93BC**	**Tube Assy. Complete**
1	BC-BC90	Boom Clamp Assy. Complete
1-A	UGN-8	Die-Cast Wing Nut w/Washer
1-B	SG-001	Spring
1-C	ZD-018N	Clamp Gear Link
1-D	ZD-019A	Boom Clamp Bolt
2	ZD-081A	Stop Lock Complete
2-A	KB-625	Key Bolt
3	NP-164	Plastic End Cap

ACCESSORIES

CA-130 Cowbell Holder

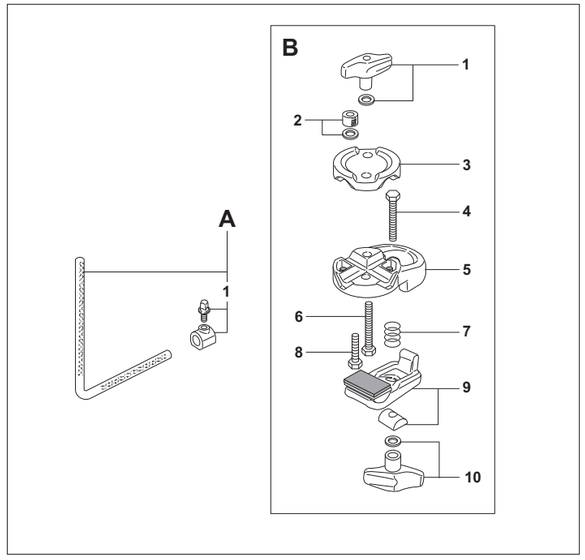

A	**SM-080A**	**L Rod Assy. Complete**
1	AD-031A	Stop Lock Complete
B	**HCP-130**	**Hoop Mount Assy. Complete**
1	UGN-6	Die-Cast Wing Nut w/Washer
2	SM-083A	Knurled Round Nut w/Washer
3	AD-028	Clamp Plate
4	SC-181	Clamp Bolt
5	AD-027A	Hoop Mount Holder
6	SC-181	Clamp Bolt
7	SG-006N	Spring
8	SC-168	Clamp Bolt
9	AD-029A	Hoop Clamp Assy.
10	UGN-6	Die-Cast Wing Nut w/Washer

PS-85 Stabilizer

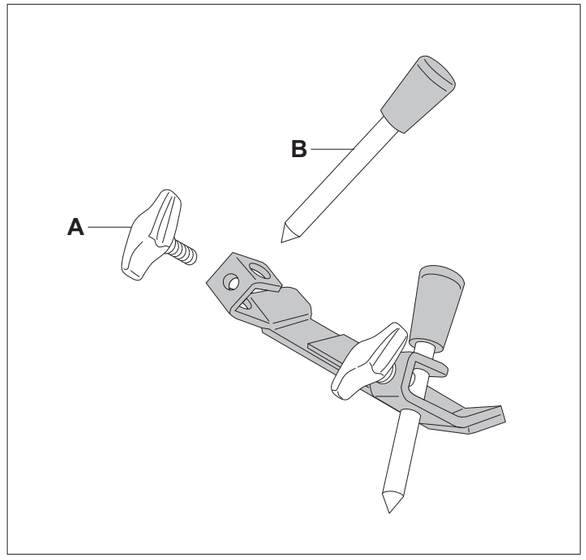

A	**UGB-815**	**Die-Cast Wing Bolt (one each)**
B	**ME-209A**	**Spike w/Rubber Tip (one each)**

JG-16 Jungle Gig Adapter

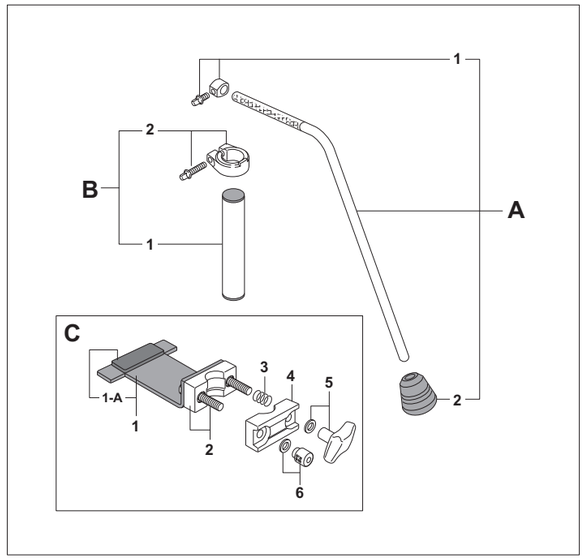

A	**ME-508A**	**Leg Assy. Complete**
1	LG-04S	Stop Lock Complete
2	R-5	Rubber Tip (one each)
B	**PP-182AA**	**Pipe Assy. Complete**
1	PP-182A	Pipe w/Plastic Caps
2	ZD-081A	Stop Lock Complete
C	**PR-551AC**	**Pedal Plate Assy. Complete**
1	PR-551A	Pedal Plate ONLY
1-A	NP-140	Rubber Protector
2	DC-365A	Pipe Bracket w/Bolts
3	SP-45S	Spring
4	DC-366	Die-Cast Link
5	UGN-8	Die-Cast Wing Nut w/Washer
6	M-8RN	Knurled Round Nut w/Washer

JG-16NK Jungle Gig Adapter

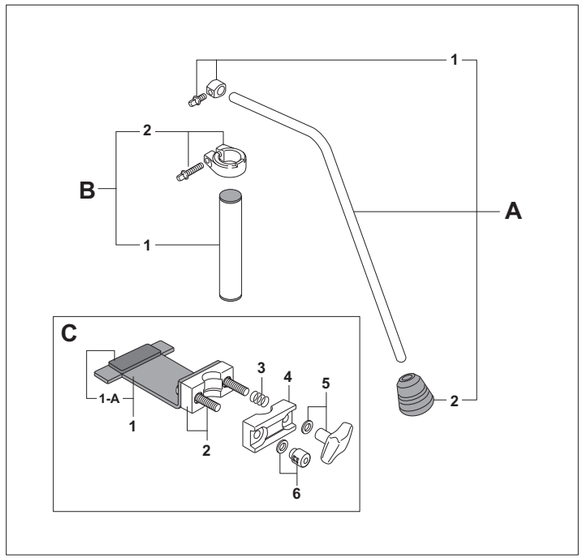

A	**ME-723A**	**Leg Assy. Complete**
1	LG-02NS	Stop Lock Complete
2	R-5	Rubber Tip (one each)
B	**PP-182AA**	**Pipe Assy. Complete**
1	PP-182A	Pipe w/Plastic Caps
2	ZD-081A	Stop Lock Complete
C	**PR-551AC**	**Pedal Plate Assy. Complete**
1	PR-551A	Pedal Plate ONLY
1-A	NP-140	Rubber Protector
2	DC-365A	Pipe Bracket w/Bolts
3	SP-45S	Spring
4	DC-366	Die-Cast Link
5	UGN-8	Die-Cast Wing Nut w/Washer
6	M-8RN	Knurled Round Nut w/Washer

SNARE STANDS

S-150S

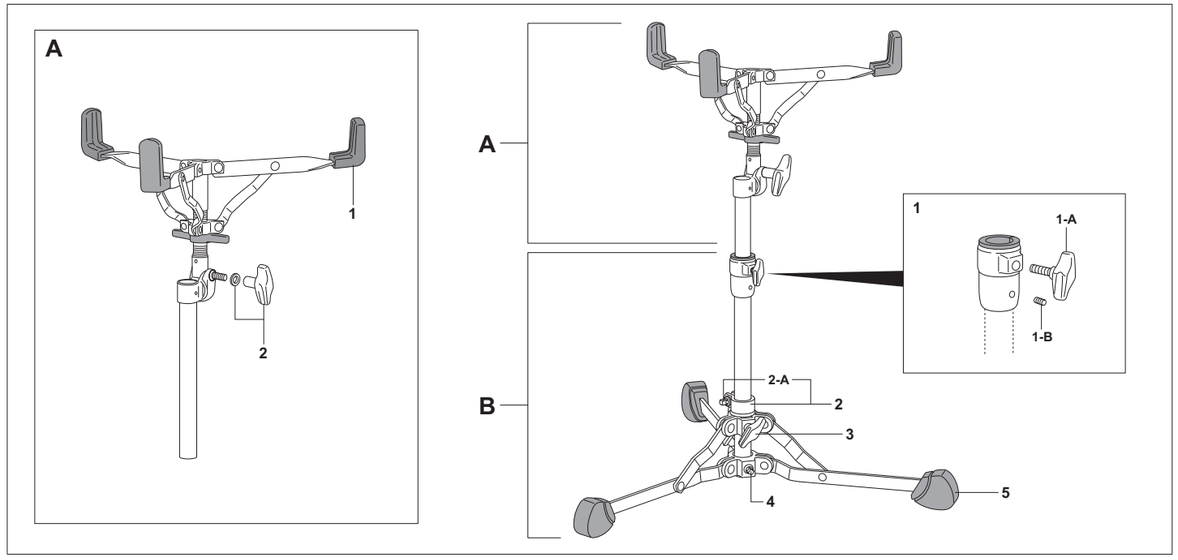

A	**S-15SA**	**Basket Complete**
1	RB-015	Rubber Sleeve (one each)
2	UGN-8L	Die-Cast Wing Nut w/Washer
B	**BA-S15S**	**Base Assy. Complete**
1	PJ-60	Die-Cast Joint Assy. Complete
1-A	UGB-815S	Die-Cast Wing Bolt
1-B	SB-44	Allen Screw
2	STB-19A	Stop Lock Complete
2-A	KB-615WS	Key Bolt w/Washer
3	UGB-815S	Die-Cast Wing Bolt
4	KB-814	Key Bolt
5	NP-454N	Rubber Tip (one each)

S-830

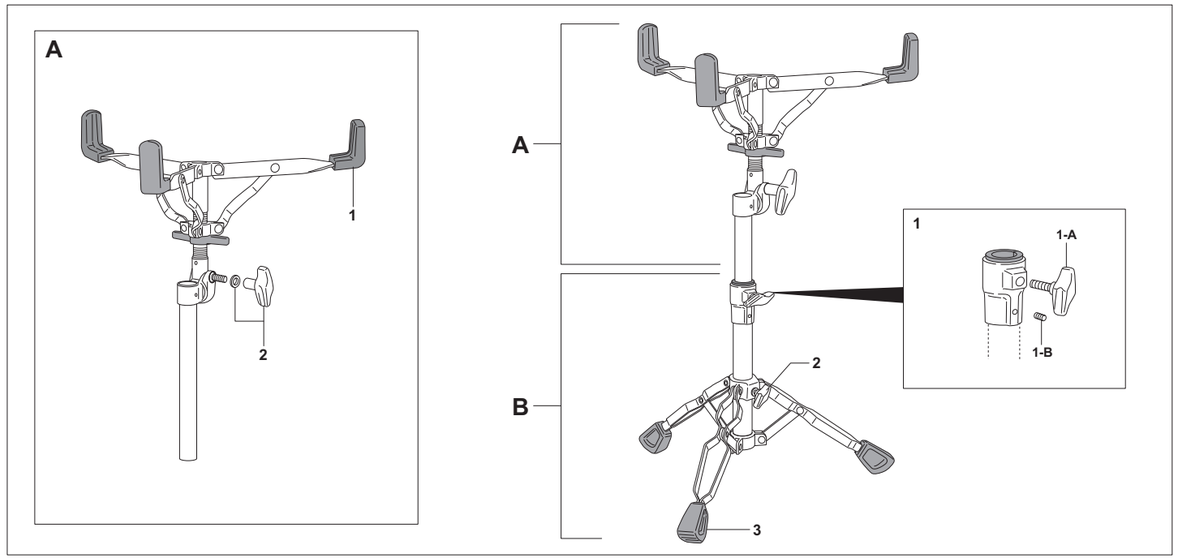

A	**S-83A**	**Basket Complete**
1	RB-015	Rubber Sleeve (one each)
2	UGN-8L	Die-Cast Wing Nut w/Washer
B	**BA-S83**	**Base Assy. Complete**
1	PJ-83L	Die-Cast Joint Assy. Complete
1-A	UGB-815S	Die-Cast Wing Bolt
1-B	SB-44	Allen Screw
2	UGB-815S	Die-Cast Wing Bolt
3	RB-022	Rubber Tip (one each)

SNARE STANDS

S-930 / S-930D

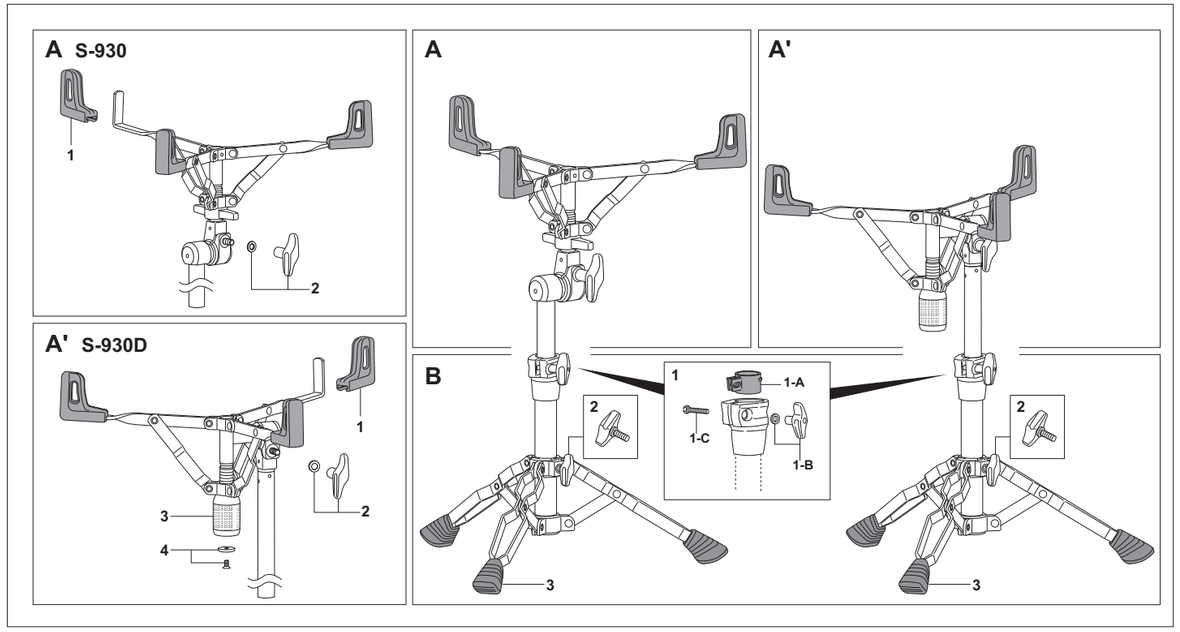

A	S-93A	Basket Complete
1	RB-010	Rubber Sleeve (one each)
2	UGN-8L	Die-Cast Wing Nut w/Washer

A'	S-93DA	Basket Complete
1	RB-010	Rubber Sleeve (one each)
2	UGN-8L	Die-Cast Wing Nut w/Washer
3	SM-069	Adjustment Dial
4	ME-697A	Flat Head Screw w/Washer

B	BA-S93	Base Assy. Complete
1	PJ-100L	Die-Cast Joint Assy. Complete
1-A	NP-366	Nylon Bushing
1-B	UGN-6	Die-Cast Wing Nut w/Washer
1-C	SC-169	Clamp Bolt
2	UGB-815S	Die-Cast Wing Bolt
3	RB-009	Rubber Tip (one each)

S-1030

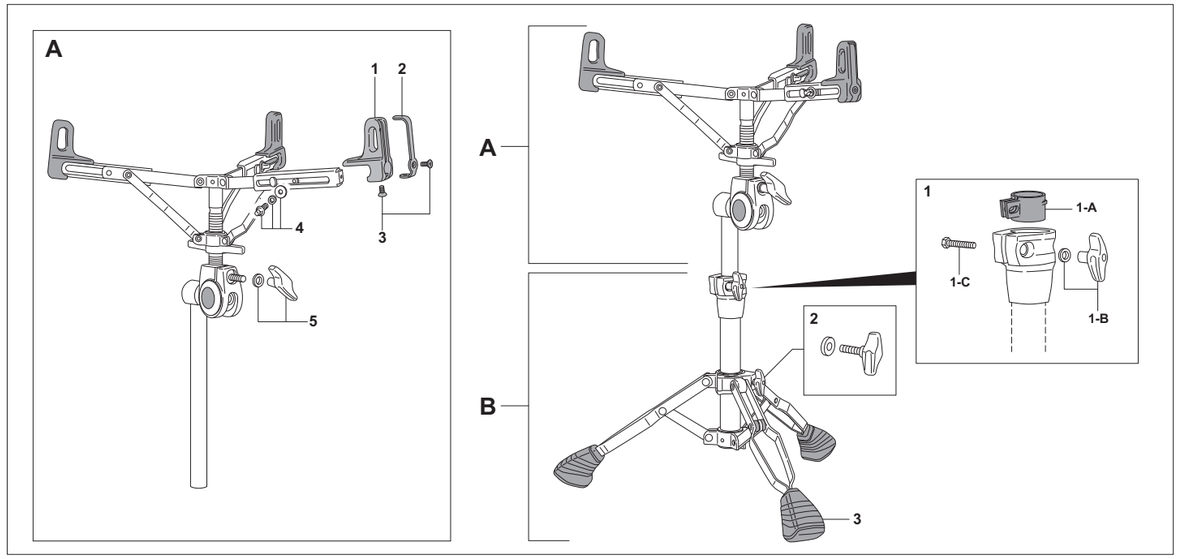

A	S-103A	Basket Complete
1	NP-320	Rubber Sleeve (one each)
2	PR-573	Rubber Sleeve Support Plate
3	SC-363	Screw (one each)
4	KB-615W	Key Bolt w/Washers
5	UGN-8L	Die-Cast Wing Nut w/Washer

B	BA-S103	Base Assy. Complete
1	PJ-100L	Die-Cast Joint Assy. Complete
1-A	NP-366	Nylon Bushing
1-B	UGN-6	Die-Cast Wing Nut w/Washer
1-C	SC-169	Clamp Bolt
2	UGB-815SW	Die-Cast Wing Bolt w/Washer
3	RB-001	Rubber Tip (one each)

DRUM THRONES

D-730S

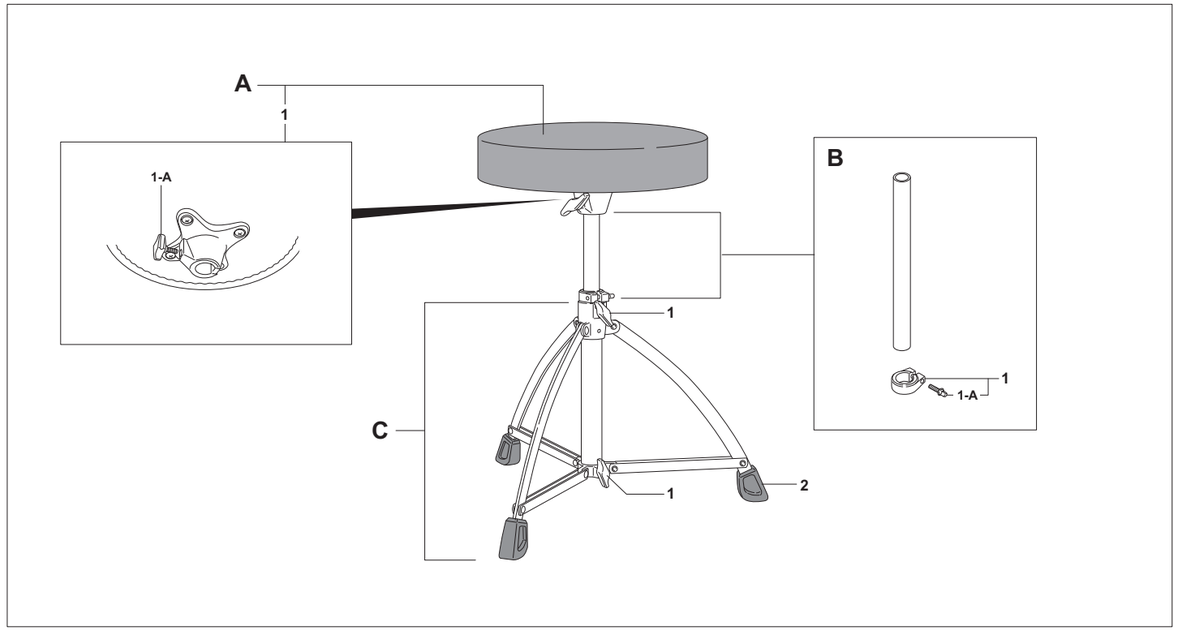

A	SEA-73A	Vinyl Seat Top w/Rod Bracket
1	AD-026A	Rod Bracket Assy. Complete
1-A	UGB-820C	Die-Cast Wing Bolt

B	UT-D73	Height Adjustment Rod Assy. Complete
1	ZD-081HA	Stop Lock Complete
1-A	KB-625	Key Bolt

C	BA-D73S	Base Assy. Complete
1	UGB-815S	Die-Cast Wing Bolt (one each)
2	RB-016	Rubber Tip (one each)

D-790

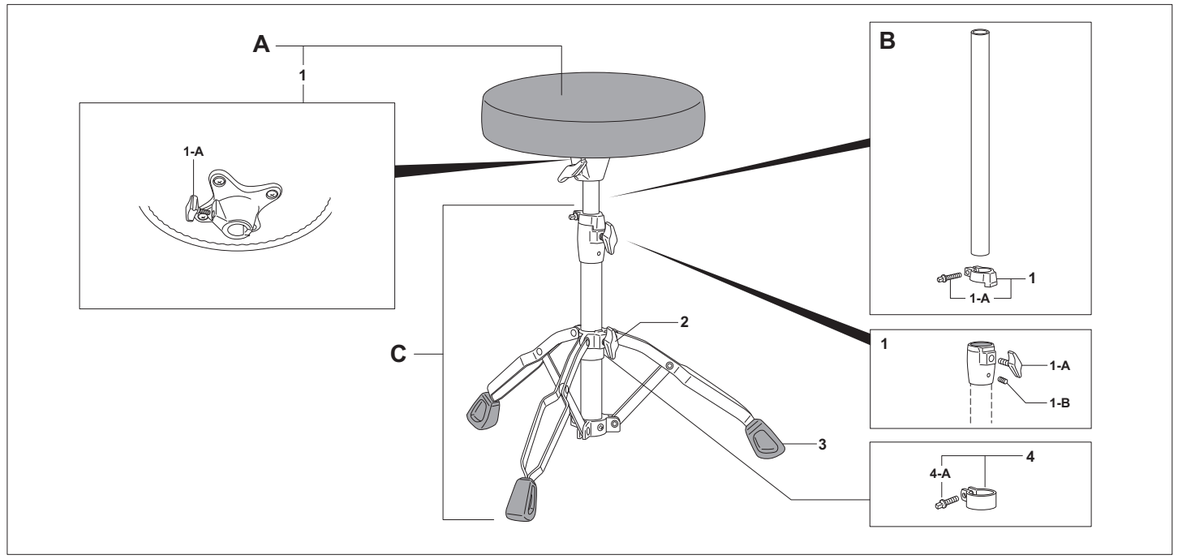

A	SEA-73A	Vinyl Seat Top w/Rod Bracket
1	AD-026A	Rod Bracket Assy. Complete
1-A	UGB-820C	Die-Cast Wing Bolt

B	UT-D79	Height Adjustment Rod Assy. Complete
1	ZD-091A	Stop Lock Complete
1-A	KB-625	Key Bolt

C	BA-D79	Base Assy. Complete
1	DJ-08A	Die-Cast Joint Assy. Complete
1-A	UGB-815S	Die-Cast Wing Bolt
1-B	SB-44	Allen Screw
2	UGB-815S	Die-Cast Wing Bolt
3	PL-034	Rubber Tip (one each)
4	STB-28A	Stop Lock Complete
4-A	KB-615	Key Bolt

D-930

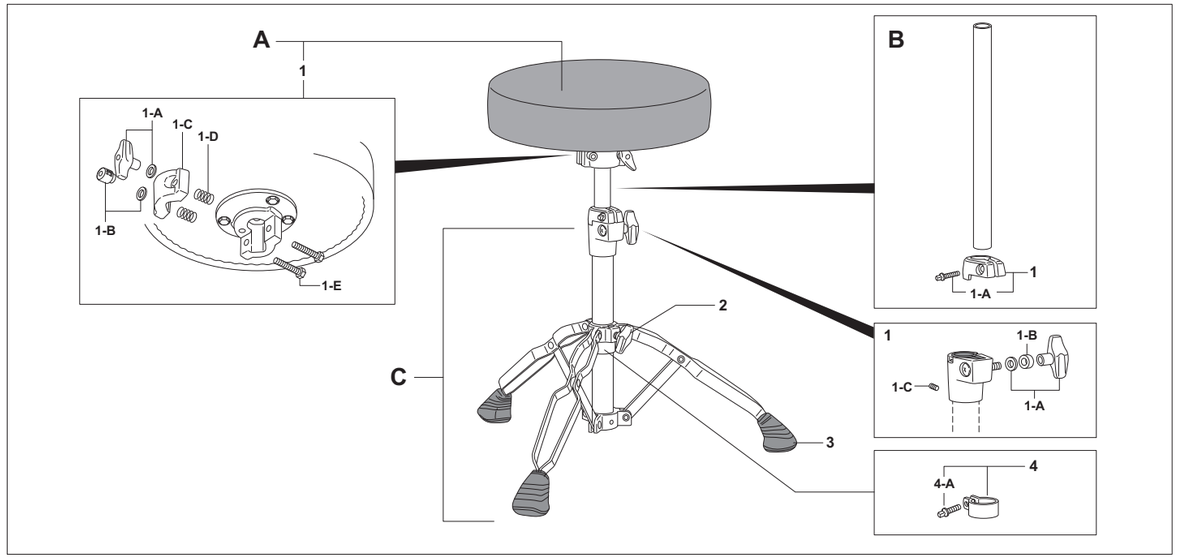

A	SEA-93A	Seat Top ONLY, Vinyl w/Two-piece Bracket
1	RBA-900A	Rod Bracket Assy. Complete
1-A	UGN-8	Die-Cast Wing Nut w/Washer
1-B	M-8RN	Knurled Round Nut w/Washer
1-C	AD-009	Die-Cast Clamp
1-D	SG-006N	Spring (one each)
1-E	SC-133	Clamp Bolt (one each)

B	UT-D93	Height Adjustment Rod Assy. Complete
1	DC-551A	Stop Lock Complete
1-A	KB-625	Key Bolt

C	BA-D93	Base Assy. Complete
1	DC-550A	Die-Cast Joint Assy. Complete
1-A	UGN-8	Die-Cast Wing Nut w/Washer
1-B	ME-661	Collar
1-C	SB-44	Allen Screw
2	UGB-815S	Die-Cast Wing Bolt
3	RB-002	Rubber Tip (one each)
4	STB-28A	Stop Lock Complete
4-A	KB-615	Key Bolt

D-1000N

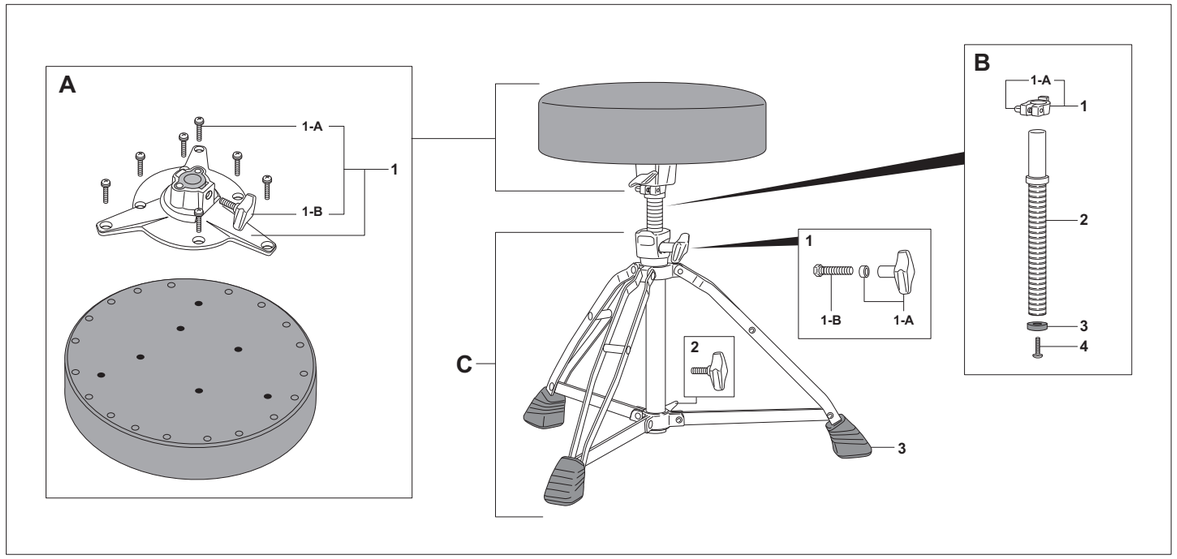

A	SE-100NNA	Seat Top ONLY
1	DC-728AA	Rod Bracket Assy. Complete
1-A	SC-437	Mounting Screw (one each)
1-B	UGB-815	Die-Cast Wing Bolt

B	ME-767A	Height Adjustment Post, Complete
1	DC-729A	Stop Lock Complete
1-A	KB-625	Key Bolt
2	ME-767	Threaded Post
3	NP-238N	Post Stopper
4	SC-352	Screw

C	BA-D100	Base Assy. Complete
1	SC-121HA	Bolt & Nut Set w/Spacer
1-A	UGN-8LS	Die-Cast Wing Nut w/Spacer
1-B	SC-121H	Clamp Bolt
2	UGB-815S	Die-Cast Wing Bolt
3	RB-019	Rubber Tip (one each)

D-1000SN

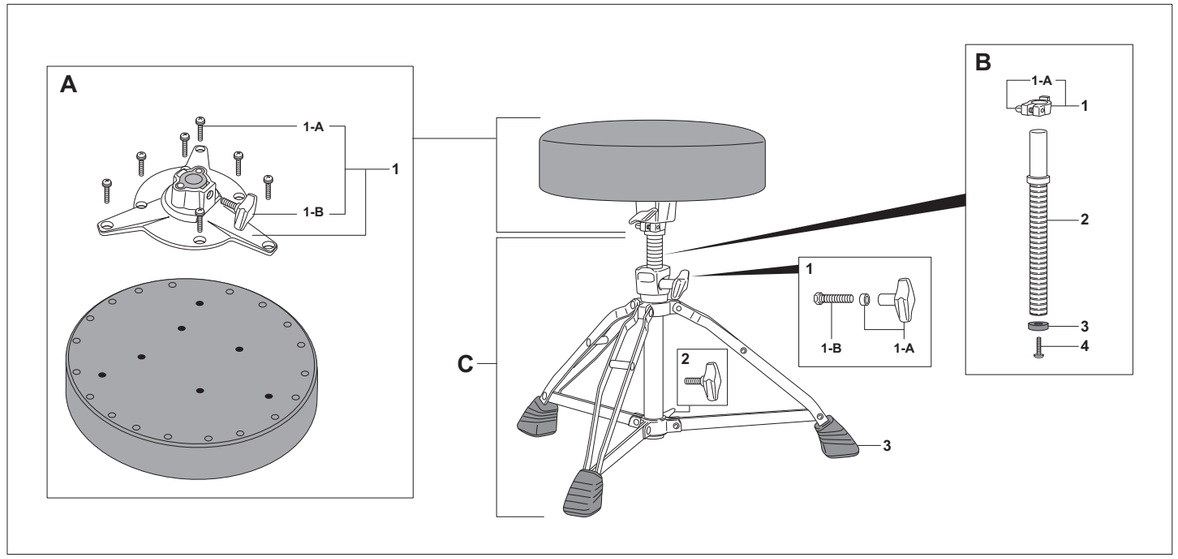

A	SE-100NNA	Seat Top ONLY
1	DC-728AA	Rod Bracket Assy. Complete
1-A	SC-437	Mounting Screw (one each)
1-B	UGB-815	Die-Cast Wing Bolt

B	ME-767A	Height Adjustment Post, Complete
1	DC-729A	Stop Lock Complete
1-A	KB-625	Key Bolt
2	ME-767	Threaded Post
3	NP-238N	Post Stopper
4	SC-352	Screw

C	BA-D100S	Base Assy. Complete
1	SC-121HA	Bolt & Nut Set w/Spacer
1-A	UGN-8LS	Die-Cast Wing Nut w/Spacer
1-B	SC-121H	Clamp Bolt
2	UGB-815S	Die-Cast Wing Bolt
3	RB-019	Rubber Tip (one each)

D-1000SPN

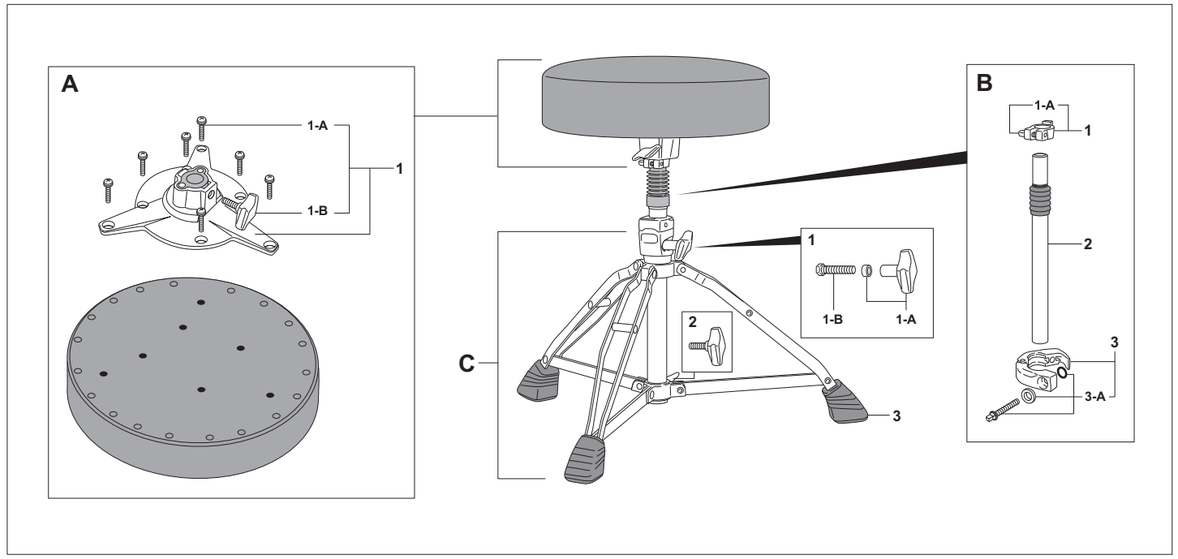

A	SE-100NNA	Seat Top ONLY
1	DC-728AA	Rod Bracket Assy. Complete
1-A	SC-437	Mounting Screw (one each)
1-B	UGB-815	Die-Cast Wing Bolt

B	SAP-100A	Shock Absorber Post, Complete
1	DC-729A	Stop Lock Complete
1-A	KB-625	Key Bolt
2	SAP-100	Shock Absorber Post ONLY
3	DC-580A	Stop Lock Complete
3-A	KB-625WO	Key Bolt w/Washer & O-Ring

C	BA-D100SP	Base Assy. Complete
1	SC-121HA	Bolt & Nut Set w/Spacer
1-A	UGN-8LS	Die-Cast Wing Nut w/Spacer
1-B	SC-121H	Clamp Bolt
2	UGB-815S	Die-Cast Wing Bolt
3	RB-019	Rubber Tip (one each)

DRUM THRONES

D-2500BR / 2500

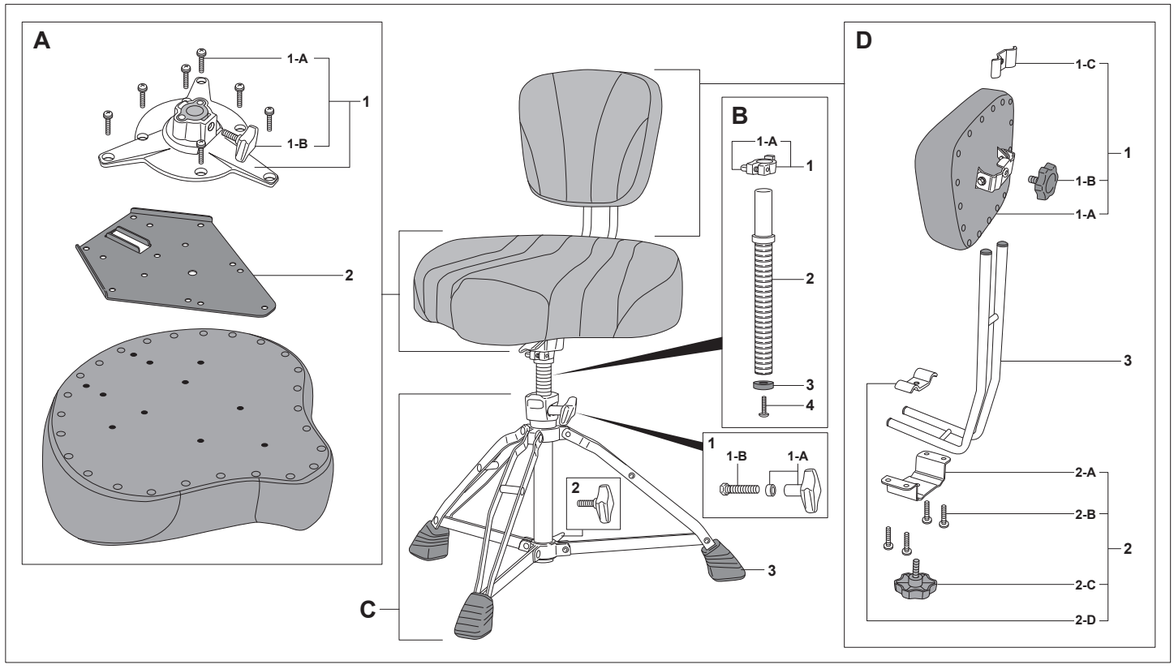

A	**SE-250A**	**Seat Top ONLY for D-2500BR / D-2500**
1	DC-728AA	Rod Bracket Assy. Complete
1-A	SC-437	Mounting Screw (one each)
1-B	UGB-815	Die-Cast Wing Bolt
2	PR-689	Back Rest Attachment Plate
B	**ME-767A**	**Height Adjustment Post, Complete**
1	DC-729A	Stop Lock Complete
1-A	KB-625	Key Bolt
2	ME-767	Threaded Post
3	NP-238N	Post Stopper
4	SC-352	Screw

C	**BA-D100**	**Base Assy. Complete**
1	SC-121HA	Bolt & Nut Set w/Spacer
1-A	UGN-8LS	Die-Cast Wing Nut w/Spacer
1-B	SC-121H	Clamp Bolt
2	UGB-815S	Die-Cast Wing Bolt
3	RB-019	Rubber Tip (one each)

D	**BR-2500A**	**Back Rest ONLY for D-2500BR**
1	NP-423BNB	Back Rest Cushion Assy. Complete
1-A	NP-423BNA	Back Rest Cushion ONLY
1-B	NP-389L	Adjustment Bolt
1-C	PR-685	Metal Clamp Plate
2	PR-687A	Back Rest Bracket Assy.
2-A	PR-687	Back Rest Bracket
2-B	SC-437	Mounting Screw (one each)
2-C	NP-389L	Adjustment Bolt
2-D	PR-685	Metal Clamp Plate
3	PP-216	Back Rest Tube

CYMBAL STANDS

C-150S

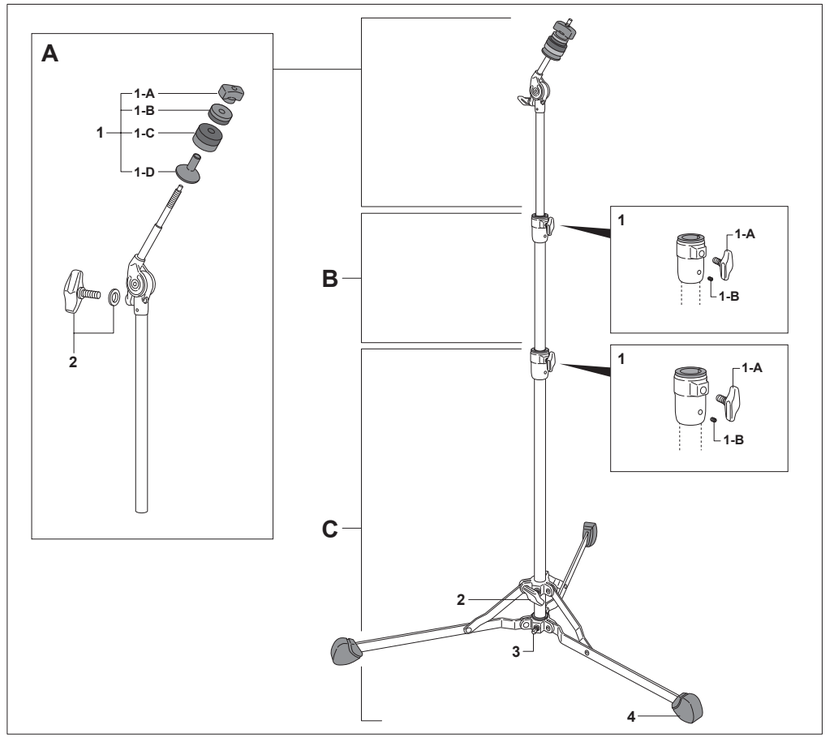

A	**UT-C15S**	**Upper Tube Assy. Complete**
1	UTS-15S	Upper Tilter Section Complete
1-A	PL-010	Plastic Cymbal Nut
1-B	FLW-006	Top Reversible Felt/Foam Washer
1-C	FLW-005	Bottom Reversible Felt/Foam Washer
1-D	PL-011	Cymbal Seat Cup
2	UGB-830TW	Die-Cast Wing Bolt w/Washer
B	**CT-C15S**	**Center Tube Assy. Complete**
1	PJ-45	Die-Cast Joint Assy. Complete
1-A	UGB-815S	Die-Cast Wing Bolt
1-B	SB-44	Allen Screw
C	**BA-C15S**	**Base Assy. Complete**
1	PJ-60	Die-Cast Joint Assy. Complete
1-A	UGB-815S	Die-Cast Wing Bolt
1-B	SB-44	Allen Screw
2	UGB-815S	Die-Cast Wing Bolt
3	KB-814	Key Bolt
4	NP-454N	Rubber Tip (one each)

C-830

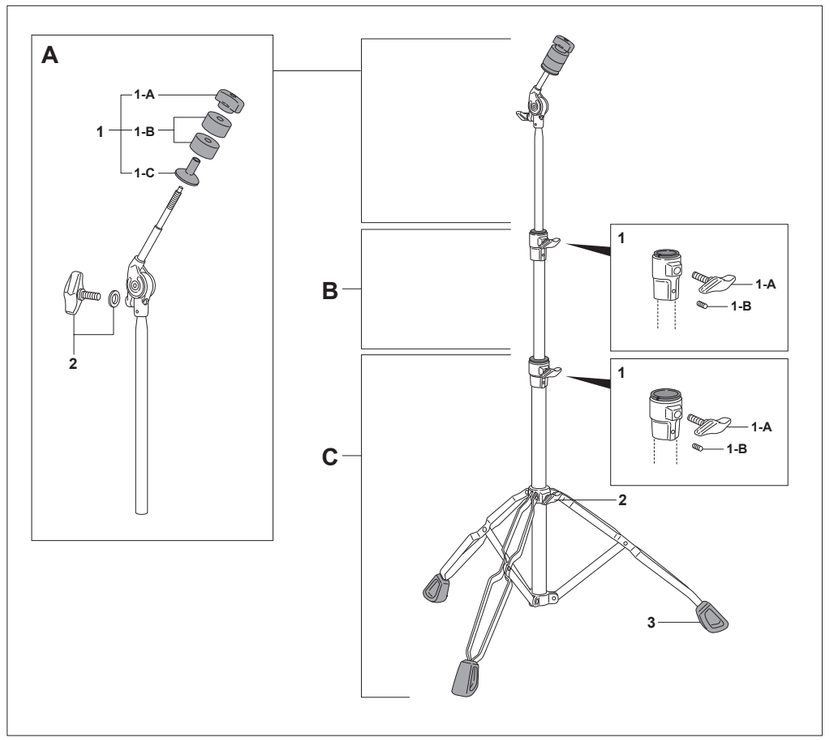

A	**UT-C83**	**Upper Tube Assy. Complete**
1	UTS-83	Upper Tilter Section Complete
1-A	PL-010	Plastic Cymbal Nut
1-B	FLW-004	Felt Washer (one each)
1-C	PL-011	Cymbal Seat Cup
2	UGB-830TW	Die-Cast Wing Bolt w/Washer
B	**CT-83**	**Center Tube Assy. Complete**
1	PJ-83S	Die-Cast Joint Assy. Complete
1-A	UGB-815S	Die-Cast Wing Bolt
1-B	SB-44	Allen Screw
C	**BA-83**	**Base Assy. Complete**
1	PJ-83L	Die-Cast Joint Assy. Complete
1-A	UGB-815S	Die-Cast Wing Bolt
1-B	SB-44	Allen Screw
2	UGB-815S	Die-Cast Wing Bolt
3	RB-022	Rubber Tip (one each)

CYMBAL STANDS

C-930

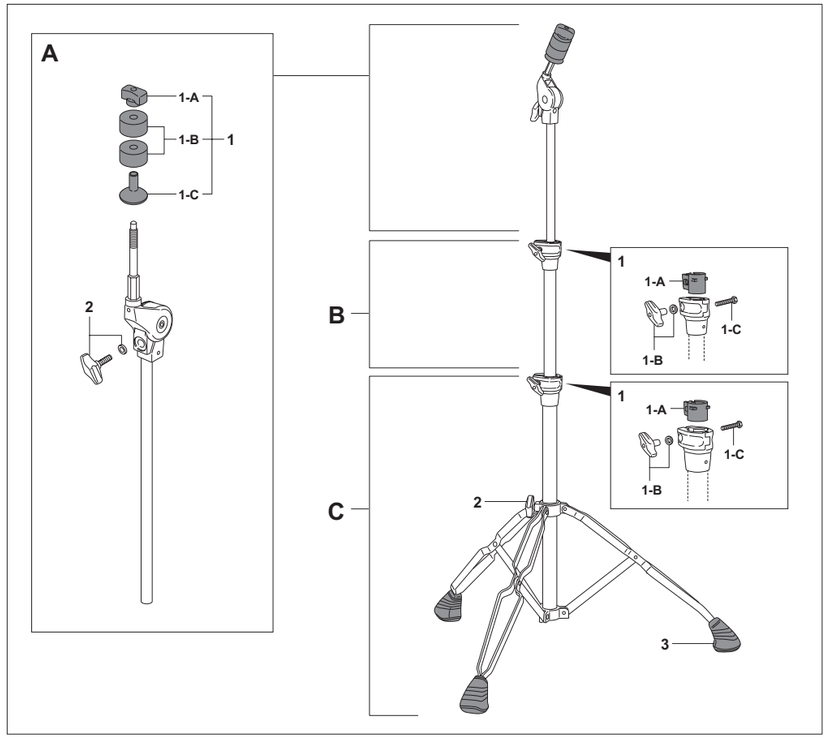

A	**UT-C93**	**Upper Tube Assy. Complete**
1	UTS-93	Upper Tilter Section Complete
1-A	PL-010	Plastic Cymbal Nut
1-B	FLW-001	Felt Washer (one each)
1-C	PL-011	Cymbal Seat Cup
2	UGB-830W	Die-Cast Wing Bolt w/Washer
B	**CT-93**	**Center Tube Assy. Complete**
1	PJ-100S	Die-Cast Joint Assy. Complete
1-A	NP-367	Nylon Bushing
1-B	UGN-6	Die-Cast Wing Nut w/Washer
1-C	SC-169	Clamp Bolt
C	**BA-93**	**Base Assy. Complete**
1	PJ-100L	Die-Cast Joint Assy. Complete
1-A	NP-366	Nylon Bushing
1-B	UGN-6	Die-Cast Wing Nut w/Washer
1-C	SC-169	Clamp Bolt
2	UGB-815S	Die-Cast Wing Bolt
3	RB-008	Rubber Tip (one each)

C-1030

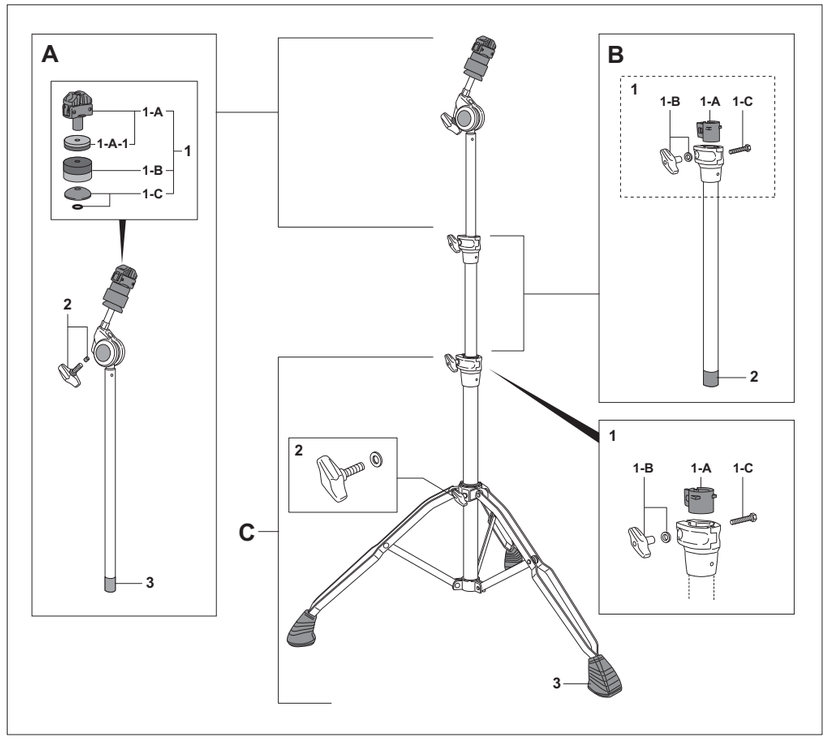

A	**UT-C103**	**Upper Tube Assy. Complete**
1	WL-230A	WingLoc Assy. Complete
1-A	WL-230	WingLoc Quick Release Wing Nut w/Reversible Felt/Foam Washer
1-A-1	FLW-006	Top Reversible Felt/Foam Washer
1-B	FLW-005	Bottom Reversible Felt/Foam Washer
1-C	RC-20	Reversible Seat Cup w/O-Ring
2	UGB-815P	Die-Cast Wing Bolt w/Pin
3	NP-375	Plastic Tip
B	**CT-103**	**Center Tube Assy. Complete**
1	PJ-100S	Die-Cast Joint Assy. Complete
1-A	NP-367	Nylon Bushing
1-B	UGN-6	Die-Cast Wing Nut w/Washer
1-C	SC-169	Clamp Bolt
2	NP-376	Plastic Tip
C	**BA-103**	**Base Assy. Complete**
1	PJ-100L	Die-Cast Joint Assy. Complete
1-A	NP-366	Nylon Bushing
1-B	UGN-6	Die-Cast Wing Nut w/Washer
1-C	SC-169	Clamp Bolt
2	UGB-815SW	Die-Cast Wing Bolt w/Washer
3	RB-001	Rubber Tip (one each)

CYMBAL BOOM STANDS

BC-150S

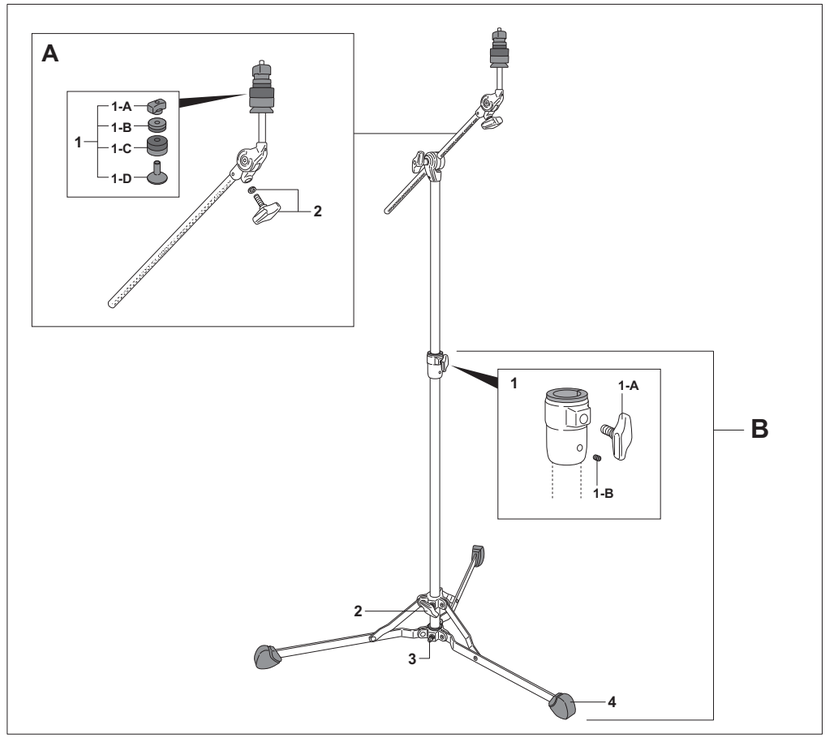

A	**AA-BC15S**	**Boom Assy. Complete**
1	UTS-15S	Upper Tilter Section Complete
1-A	PL-010	Plastic Cymbal Nut
1-B	FLW-006	Top Reversible Felt/Foam Washer
1-C	FLW-005	Bottom Reversible Felt/Foam Washer
1-D	PL-011	Cymbal Seat Cup
2	UGB-830TW	Die-Cast Wing Bolt w/Washer
B	**BA-BC15S**	**Base Assy. Complete**
1	PJ-60	Die-Cast Joint Assy. Complete
1-A	UGB-815S	Die-Cast Wing Bolt
1-B	SB-44	Allen Screw
2	UGB-815S	Die-Cast Wing Bolt
3	KB-814	Key Bolt
4	NP-454N	Rubber Tip (one each)

BC-830

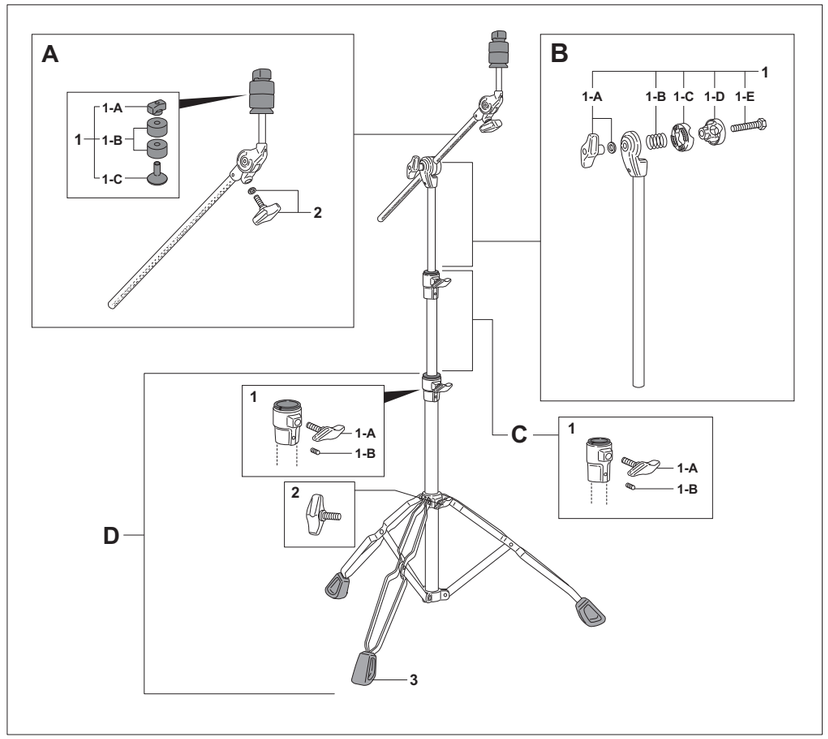

A	**AA-BC83**	**Boom Assy. Complete**
1	UTS-83	Upper Tilter Section Complete
1-A	PL-010	Plastic Cymbal Nut
1-B	FLW-004	Felt Washer (one each)
1-C	PL-011	Cymbal Seat Cup
2	UGB-830TW	Die-Cast Wing Bolt w/Washer
B	**UT-BC83**	**Upper Tube Assy. Complete**
1	BC-BC83	Boom Clamp Assy. Complete
1-A	UGN-8T	Die-Cast Wing Nut w/Washer
1-B	SG-001	Spring
1-C	ZD-118	Clamp Gear Link
1-D	ZD-119	Boom Clamp
1-E	SC-471	Boom Clamp Bolt
C	**CT-83**	**Center Tube Assy. Complete**
1	PJ-83S	Die-Cast Joint Assy. Complete
1-A	UGB-815S	Die-Cast Wing Bolt
1-B	SB-44	Allen Screw
D	**BA-83**	**Base Assy. Complete**
1	PJ-83L	Die-Cast Joint Assy. Complete
1-A	UGB-815S	Die-Cast Wing Bolt
1-B	SB-44	Allen Screw
2	UGB-815S	Die-Cast Wing Bolt
3	RB-022	Rubber Tip (one each)

CYMBAL BOOM STANDS

BC-930

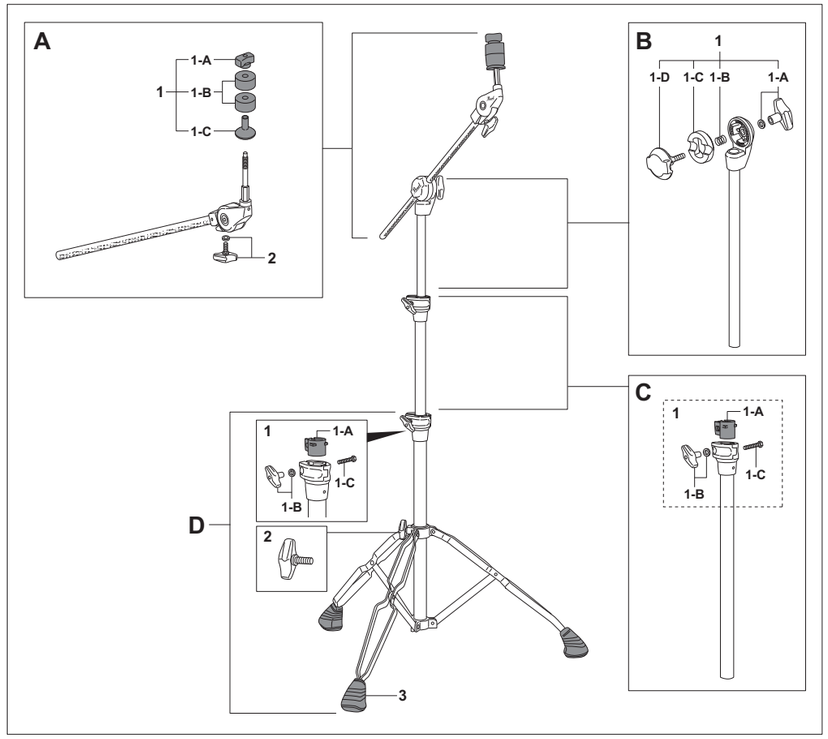

A	**AA-BC90**	**Boom Assy. Complete**
1	UTS-93	Upper Tilter Section Complete
1-A	PL-010	Plastic Cymbal Nut
1-B	FLW-001	Felt Washer (one each)
1-C	PL-011	Cymbal Seat Cup
2	UGB-830W	Die-Cast Wing Bolt w/Washer
B	**UT-BC89**	**Upper Tube Assy. Complete**
1	BC-BC90	Boom Clamp Assy. Complete
1-A	UGN-8	Die-Cast Wing Nut w/Washer
1-B	SG-001	Spring
1-C	ZD-018N	Clamp Gear Link
1-D	ZD-019A	Boom Clamp Bolt
C	**CT-93**	**Center Tube Assy. Complete**
1	PJ-100S	Die-Cast Joint Assy. Complete
1-A	NP-367	Nylon Bushing
1-B	UGN-6	Die-Cast Wing Nut w/Washer
1-C	SC-169	Clamp Bolt
D	**BA-93**	**Base Assy. Complete**
1	PJ-100L	Die-Cast Joint Assy. Complete
1-A	NP-366	Nylon Bushing
1-B	UGN-6	Die-Cast Wing Nut w/Washer
1-C	SC-169	Clamp Bolt
2	UGB-815S	Die-Cast Wing Bolt
3	RB-008	Rubber Tip (one each)

B-1030

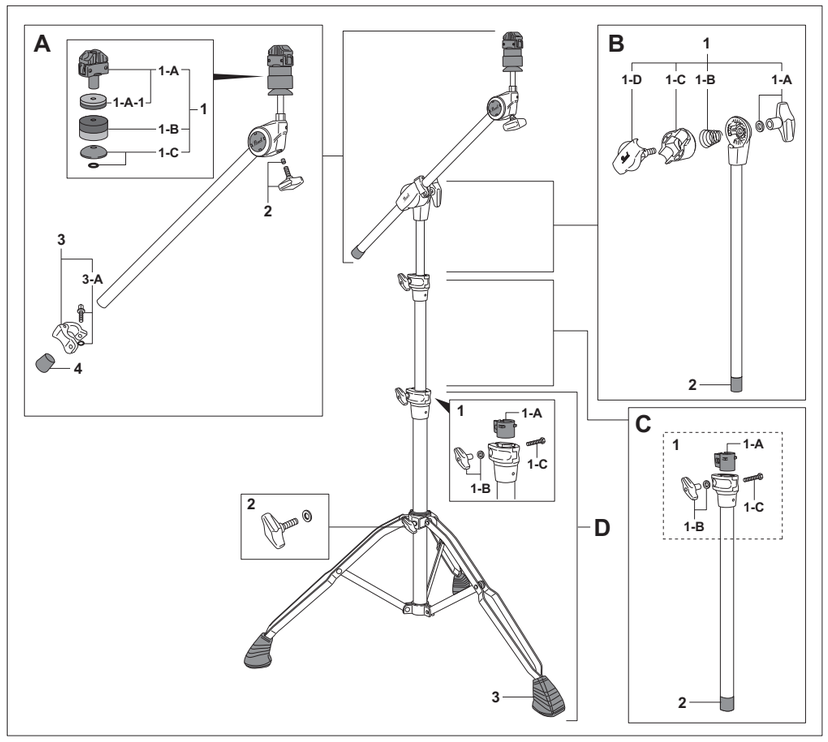

A	**AA-B103**	**Boom Assy. Complete**
1	WL-230A	WingLoc Assy. Complete
1-A	WL-230	WingLoc Quick Release Wing Nut w/Reversible Felt/Foam Washer
1-A-1	FLW-006	Top Reversible Felt/Foam Washer
1-B	FLW-005	Bottom Reversible Felt/Foam Washer
1-C	RC-20	Reversible Seat Cup w/O-Ring
2	UGB-815P	Die-Cast Wing Bolt w/Pin
3	DC-625A	Stop Lock Complete
3-A	KB-615O	Key Bolt w/O-Ring
4	NP-71	Plastic Tip
B	**UT-B103**	**Upper Tube Assy. Complete**
1	BC-BC203	Boom Clamp Assy. Complete
1-A	UGN-8L	Die-Cast Wing Nut w/Washer
1-B	SG-007N	Spring
1-C	ZD-129	Clamp Gear Link
1-D	ZD-128A	Boom Clamp Bolt
2	NP-375	Plastic Tip
C	**CT-103**	**Center Tube Assy. Complete**
1	PJ-100S	Die-Cast Joint Assy. Complete
1-A	NP-367	Nylon Bushing
1-B	UGN-6	Die-Cast Wing Nut w/Washer
1-C	SC-169	Clamp Bolt
2	NP-376	Plastic Tip
D	**BA-103**	**Base Assy. Complete**
1	PJ-100L	Die-Cast Joint Assy. Complete
1-A	NP-366	Nylon Bushing
1-B	UGN-6	Die-Cast Wing Nut w/Washer
1-C	SC-169	Clamp Bolt
2	UGB-815SW	Die-Cast Wing Bolt w/Washer
3	RB-001	Rubber Tip (one each)

CYMBAL BOOM STANDS

BC-2030

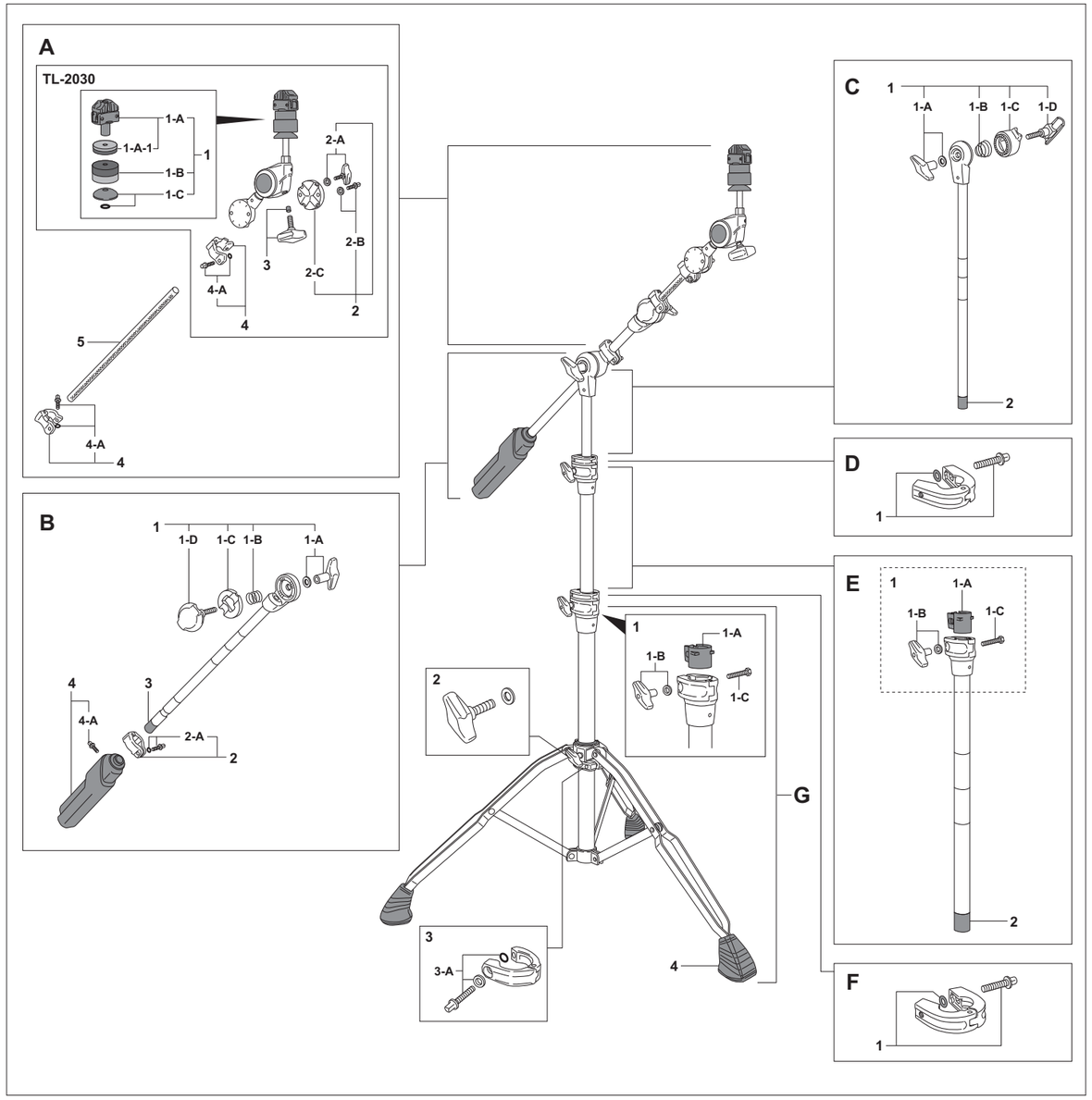

A	**UB-BC203**	**Upper Boom Assy. Complete**
1	WL-230A	WingLoc Assy. Complete
1-A	WL-230	WingLoc Quick Release Wing Nut w/Reversible Felt/Foam Washer
1-A-1	FLW-006	Top Reversible Felt/Foam Washer
1-B	FLW-005	Bottom Reversible Felt/Foam Washer
1-C	RC-20	Reversible Seat Cup w/O-Ring
2	DC-634AN	Clamp Assy. Complete
2-A	UGB-620W	Die-Cast Wing Bolt w/Washer
2-B	KB-620W	Key Bolt w/Washer
2-C	DC-634N	Clamp Plate
3	UGB-815P	Die-Cast Wing Bolt w/Pin
4	DC-627AN	Stop Lock Complete (one set)
4-A	KB-615O	Key Bolt w/O-Ring
5	ME-651N	Knurled Boom Arm

B	**LB-BC203**	**Lower Boom Assy. Complete**
1	BC-BC90	Boom Clamp Assy. Complete
1-A	UGN-8	Die-Cast Wing Nut w/Washer
1-B	SG-001	Spring
1-C	ZD-018N	Clamp Gear Link
1-D	ZD-019A	Boom Clamp Bolt
2	DC-625A	Stop Lock Complete
2-A	KB-615O	Key Bolt w/O-Ring
3	NP-430	Plastic Tip
4	NP-373A	Boom Arm Counterweight w/Key Bolt
4-A	KB-615	Key Bolt
C	**UT-BC203**	**Upper Tube Assy. Complete**
1	BC-BC203	Boom Clamp Assy. Complete
1-A	UGN-8L	Die-Cast Wing Nut w/Washer
1-B	SG-007N	Spring
1-C	ZD-129	Clamp Gear Link
1-D	ZD-128A	Boom Clamp Bolt
2	NP-375	Plastic Tip

D	**ZD-106A**	**Stop Lock Complete**
1	KB-625O	Key Bolt w/O-Ring
E	**CT-203**	**Center Tube Assy. Complete**
1	PJ-100S	Die-Cast Joint Assy. Complete
1-A	NP-367	Nylon Bushing
1-B	UGN-6	Die-Cast Wing Nut w/Washer
1-C	SC-169	Clamp Bolt
2	NP-376	Plastic Tip
F	**ZD-104A**	**Stop Lock Complete**
1	KB-625O	Key Bolt w/O-Ring
G	**BA-203**	**Base Assy. Complete**
1	PJ-100L	Die-Cast Joint Assy. Complete
1-A	NP-366	Nylon Bushing
1-B	UGN-6	Die-Cast Wing Nut w/Washer
1-C	SC-169	Clamp Bolt
2	UGB-815SW	Die-Cast Wing Bolt w/Washer
3	DC-582A	Stop Lock Complete
3-A	KB-625WO	Key Bolt w/Washer & O-Ring
4	RB-001	Rubber Tip (one each)

CYMBAL HOLDERS

CH-70

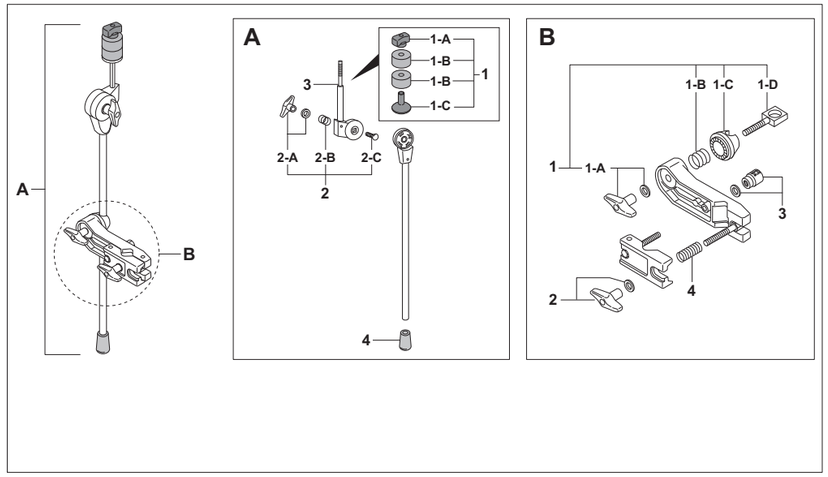

A	**AA-CH70**	**Boom Assy. Complete**
1	UTS-83	Upper Tilter Section Complete
1-A	PL-010	Plastic Cymbal Nut
1-B	FLW-004	Felt Washer (one each)
1-C	PL-011	Cymbal Seat Cup
2	SN-800A	Bolt & Nut Set w/Spring
2-A	UGN-8	Die-Cast Wing Nut w/Washer
2-B	SG-001	Spring
2-C	SC-36B-ED	Clamp Bolt
3	ZD-072A	Tilter Unit
4	NP-72	Plastic Tip
B	**CA-70A**	**Clamp Assy. Complete**
1	BC-70AN	Boom Clamp Assy. Complete
1-A	UGN-8	Die-Cast Wing Nut w/Washer
1-B	SG-001	Spring
1-C	DC-335	Clamp Gear Link
1-D	ME-67	Boom Clamp Bolt
2	UGN-8	Die-Cast Wing Nut w/Washer
3	M-8RN	Knurled Round Nut w/Washer
4	SG-009	Spring

CH-830/830S

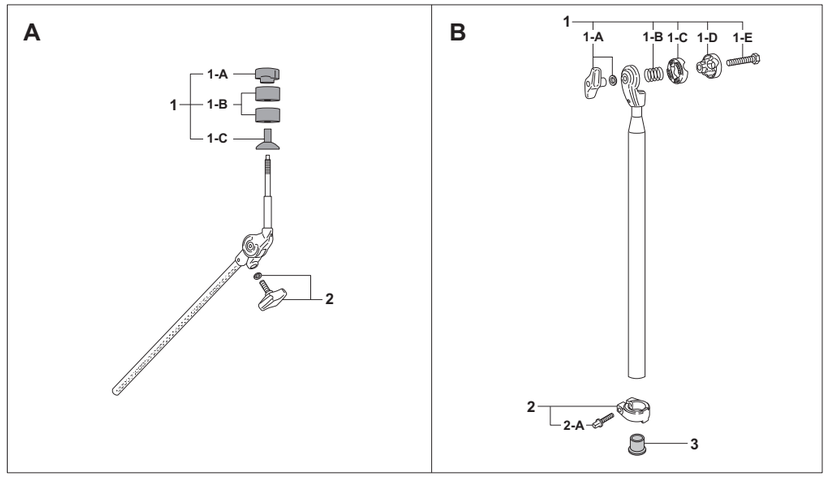

A	**AA-BC83**	**Boom Assy. Complete (CH-830)**
	AA-BC83S	**Boom Assy. Complete (CH-830S)**
1	UTS-83	Upper Tilter Section Complete
1-A	PL-010	Plastic Cymbal Nut
1-B	FLW-004	Felt Washer (one each)
1-C	PL-011	Cymbal Seat Cup
2	UGB-830TW	Die-Cast Wing Nut w/Washer
B	**UT-CH83BC**	**Tube Assy. Complete (CH-830)**
	UT-CH83BCS	**Tube Assy. Complete (CH-830S)**
1	BC-BC83	Boom Clamp Assy. Complete
1-A	UGN-8T	Die-Cast Wing Nut w/Washer
1-B	SG-001	Spring
1-C	ZD-118	Clamp Gear Link
1-D	ZD-119	Boom Clamp
1-E	SC-471	Boom Clamp Bolt
2	ZD-081A	Stop Lock Complete
2-A	KB-625	Key Bolt
3	NP-164	Plastic End Cap

CH-930

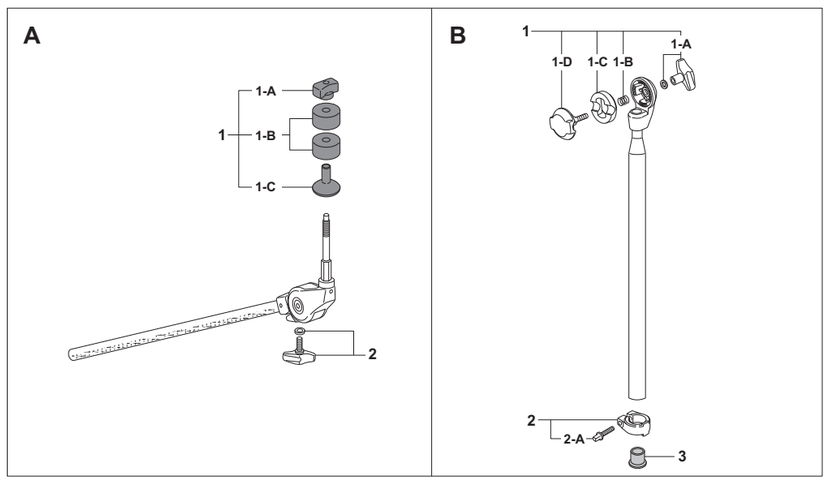

A	**AA-BC90**	**Boom Assy. Complete**
1	UTS-93	Upper Tilter Section Complete
1-A	PL-010	Plastic Cymbal Nut
1-B	FLW-001	Felt Washer (one each)
1-C	PL-011	Cymbal Seat Cup
2	UGB-830W	Die-Cast Wing Bolt w/Washer
B	**UT-CH93BC**	**Tube Assy. Complete**
1	BC-BC90	Boom Clamp Assy. Complete
1-A	UGN-8	Die-Cast Wing Nut w/Washer
1-B	SG-001	Spring
1-C	ZD-018N	Clamp Gear Link
1-D	ZD-019A	Boom Clamp Bolt
2	ZD-081A	Stop Lock Complete
2-A	KB-625	Key Bolt
3	NP-164	Plastic End Cap

CYMBAL HOLDERS

CH-1030B

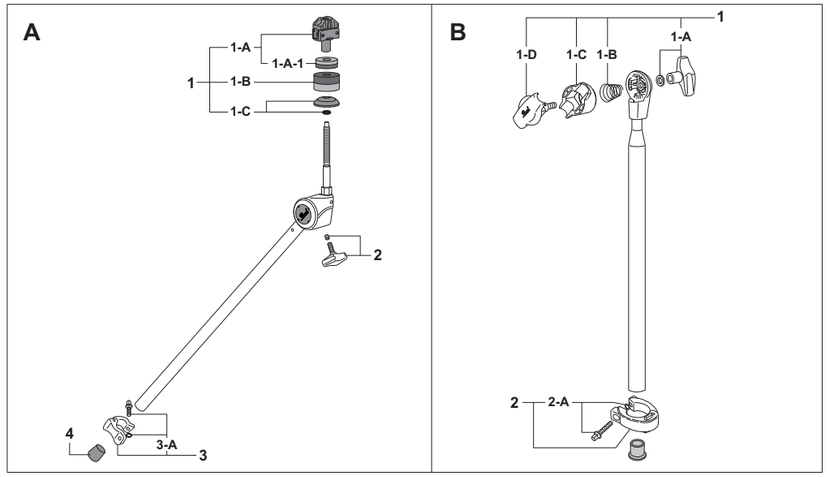

A	**AA-B103**	**Boom Assy. Complete**
1	WL-230A	WingLoc Assy. Complete
1-A	WL-230	WingLoc Quick Release Wing Nut w/Reversible Felt/Foam Washer
1-A-1	FLW-006	Top Reversible Felt/Foam Washer
1-B	FLW-005	Bottom Reversible Felt/Foam Washer
1-C	RC-20	Reversible Seat Cup w/O-Ring
2	UGB-815P	Die-Cast Wing Bolt w/Pin
3	DC-625A	Stop Lock Complete
3-A	KB-615O	Key Bolt w/O-Ring
4	NP-71	Plastic Tip
B	**UT-CH103B**	**Tube Assy. Complete**
1	BC-BC203	Boom Clamp Assy. Complete
1-A	UGN-8L	Die-Cast Wing Nut w/Washer
1-B	SG-007N	Spring
1-C	ZD-129	Clamp Gear Link
1-D	ZD-128A	Boom Clamp Bolt
2	RSP-22TN	Stop Lock Complete
2-A	KB-625O	Key Bolt w/O-Ring
3	NP-164	Plastic End Cap

TX-100 Tube Extender

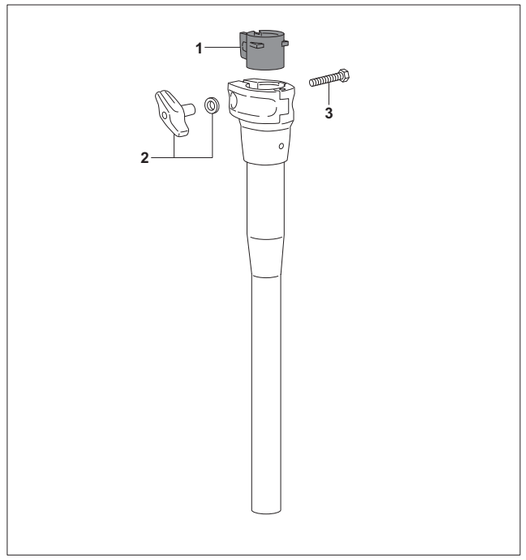

1	NP-366	Nylon Bushing
2	UGN-6	Die-Cast Wing Nut w/Washer
3	SC-169	Clamp Bolt

UX-80/80S Universal Clam

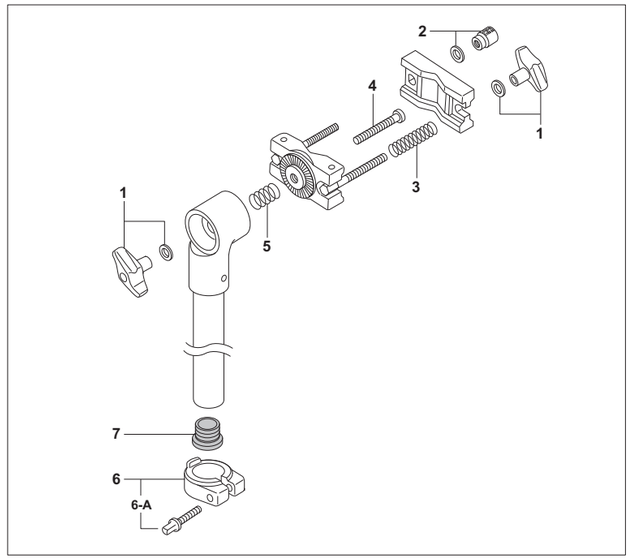

1	UGN-8	Die-Cast Wing Nut w/Washer (one set)
2	M-8RN	Knurled Round Nut w/Washer
3	SG-009	Spring
4	SC-144	Center Bolt
5	SP-36	Spring
6	ZD-081A	Stop Lock Complete
6-A	KB-625	Key Bolt
7	NP-164	Plastic End Cap

ADAPTERS

AX-25 / 25L

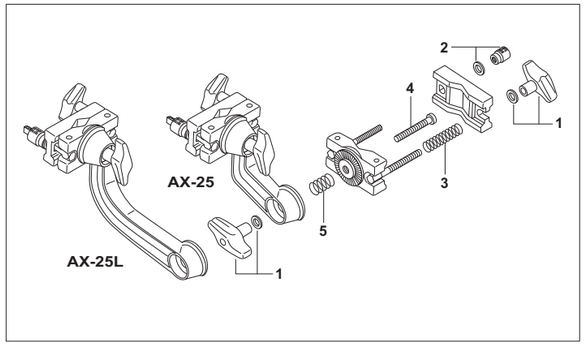

1	UGN-8	Die-Cast Wing Nut w/Washer (one set)
2	M-8RN	Knurled Round Nut w/Washer
3	SG-009	Spring
4	SC-144	Center Bolt
5	SP-36	Spring

AX-28

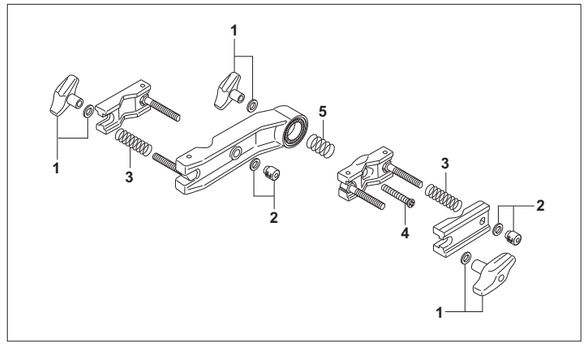

1	UGN-8	Die-Cast Wing Nut w/Washer (one set)
2	M-8RN	Knurled Round Nut w/Washer (one each)
3	SG-009	Spring (one each)
4	SC-144	Center Bolt
5	SP-36	Spring

ADP-20

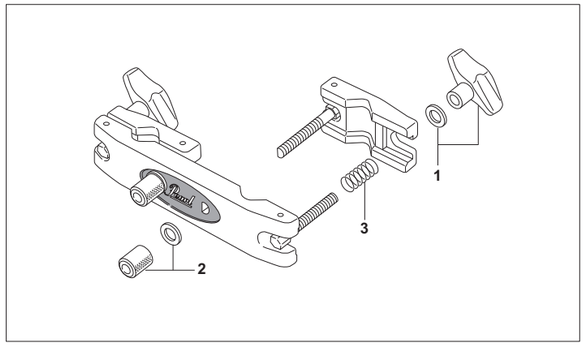

1	UGN-8	Die-Cast Wing Nut w/Washer (one set)
2	M-8RN	Knurled Round Nut w/Washer
3	SG-009	Spring

ADP-30

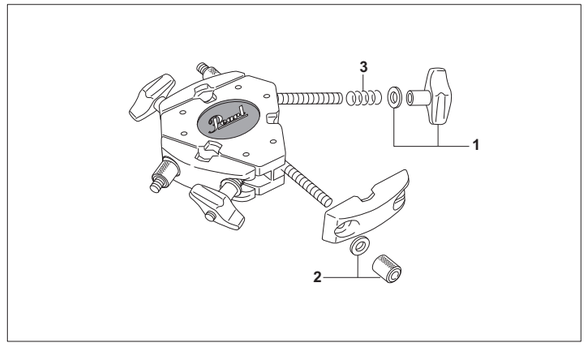

1	UGN-8	Die-Cast Wing Nut w/Washer (one set)
2	M-8RN	Knurled Round Nut w/Washer
3	SG-009	Spring

TOM HOLDERS

TH-70I / 70S

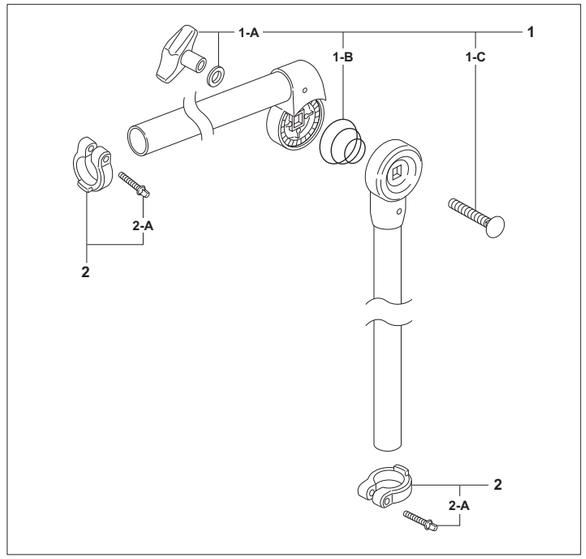

1	SN-85A	Bolt & Nut Set w/Spring
1-A	UGN-8	Die-Cast Wing Nut w/Washer
1-B	SG-007N	Spring
1-C	SC-36B-ED	Clamp Bolt
2	ZD-081A	Stop Lock Complete (one set)
2-A	KB-625	Key Bolt

TH-88I / 88S

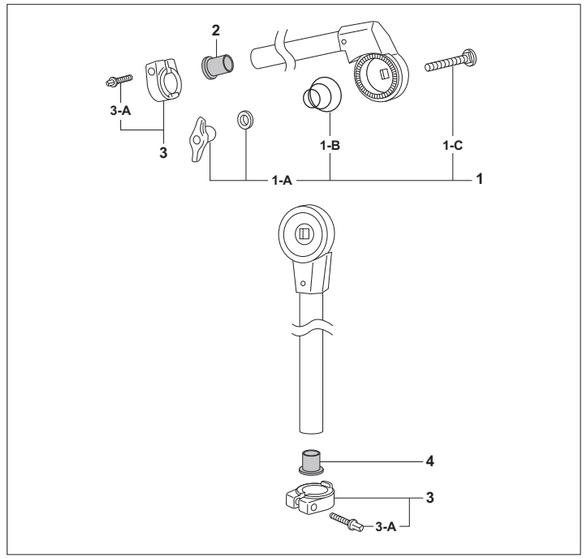

1	SN-85A	Bolt & Nut Set w/Spring
1-A	UGN-8	Die-Cast Wing Nut w/Washer
1-B	SG-007N	Spring
1-C	SC-36B-ED	Clamp Bolt
2	NP-164	Plastic End Cap
3	ZD-081A	Stop Lock Complete (one set)
3-A	KB-625	Key Bolt
4	NP-164	Plastic End Cap

TH-900I / 900S

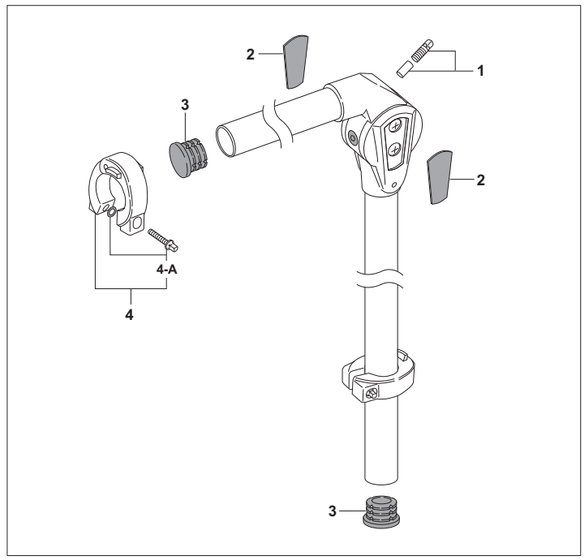

1	KB-821P	Key Bolt w/Pin
2	LGS-005	Logo Plate (one each)
3	NP-164	Plastic End Cap (one each)
4	RSP-22TN	Stop Lock Complete (one set)
4-A	KB-625O	Key Bolt w/O-Ring

TH-1030 / 1030I / 1030S

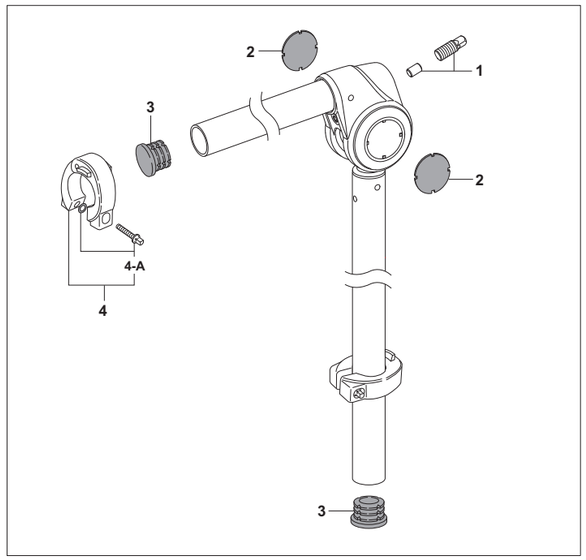

1	KB-814P	Key Bolt w/Pin
2	B-TH-1	Logo Plate (one each)
3	NP-164	Plastic End Cap (one each)
4	RSP-22TN	Stop Lock Complete (one set)
4-A	KB-625O	Key Bolt w/O-Ring

TOM STANDS

T-930

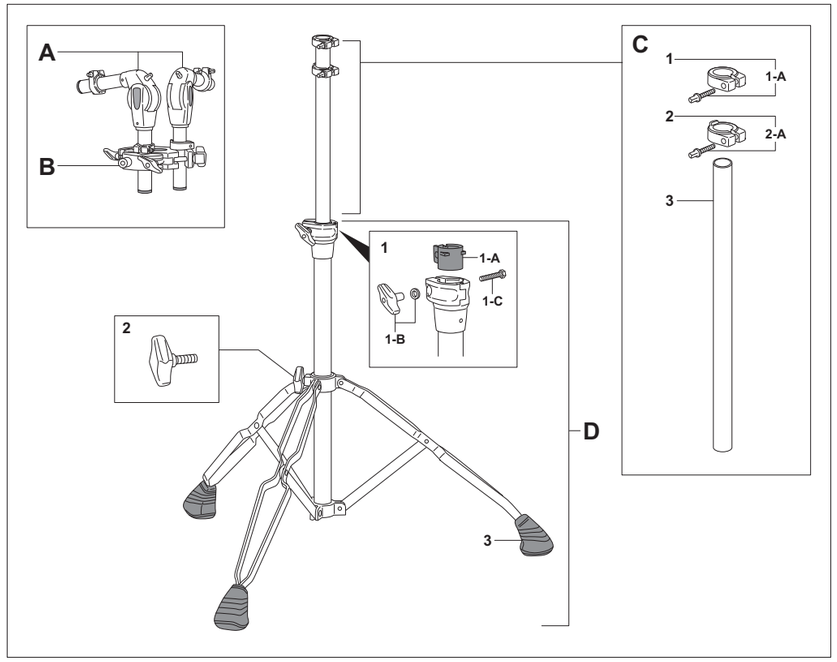

A	**TH-900S**	**Tom Holder, Short (one each)**
B	**ADP-30**	**Adapter - Please refer to the Adapter section**
C	**UT-T89**	**Upper Tube Assy. Complete**
1	ZD-081TA	Stop Lock Complete
1-A	KB-625	Key Bolt
2	ZD-081A	Stop Lock Complete
2-A	KB-625	Key Bolt
3	TU-90T	Upper Tube ONLY
D	**BA-93**	**Base Assy. Complete**
1	PJ-100L	Die-Cast Joint Assy. Complete
1-A	NP-366	Nylon Bushing
1-B	UGN-6	Die-Cast Wing Nut w/Washer
1-C	SC-169	Clamp Bolt
2	UGB-815S	Die-Cast Wing Bolt
3	RB-008	Rubber Tip (one each)

T-1030

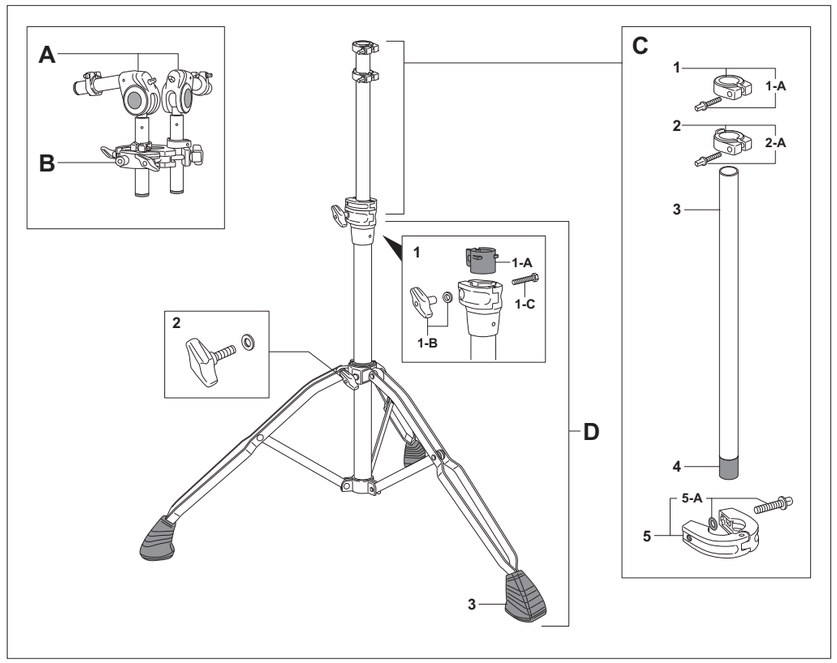

A	**TH-1030S**	**Tom Holder, Short (one each)**
B	**ADP-30**	**Adapter - Please refer to the Adapter section**
C	**UT-T103**	**Upper Tube Assy. Complete**
1	ZD-081TA	Stop Lock Complete
1-A	KB-625	Key Bolt
2	ZD-081A	Stop Lock Complete
2-A	KB-625	Key Bolt
3	TU-90T	Upper Tube ONLY
4	NP-376	Plastic Tip
5	ZD-104A	Stop Lock Complete
5-A	KB-625O	Key Bolt w/O-Ring
D	**BA-103**	**Base Assy. Complete**
1	PJ-100L	Die-Cast Joint Assy. Complete
1-A	NP-366	Nylon Bushing
1-B	UGN-6	Die-Cast Wing Nut w/Washer
1-C	SC-169	Clamp Bolt
2	UGB-815SW	Die-Cast Wing Bolt w/Washer
3	RB-001	Rubber Tip (one each)

TOM CYMBAL STANDS

TC-930

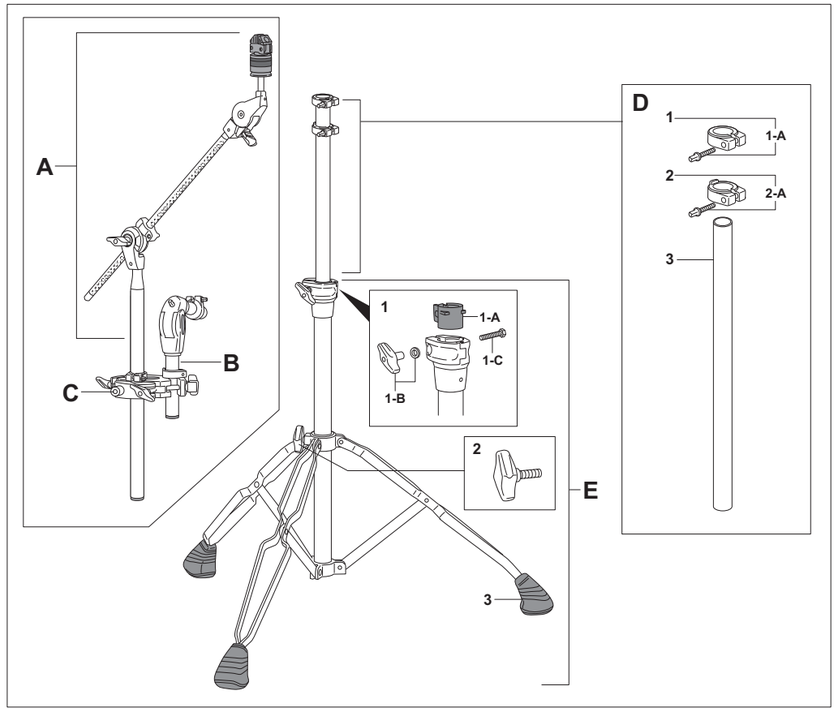

A	**CH-930**	**Cymbal Holder**
B	**TH-900S**	**Tom Holder, Short**
C	**ADP-30**	**Adapter - Please refer to the Adapter section**
D	**UT-T89**	**Upper Tube Assy. Complete**
1	ZD-081TA	Stop Lock Complete
1-A	KB-625	Key Bolt
2	ZD-081A	Stop Lock Complete
2-A	KB-625	Key Bolt
3	TU-90T	Upper Tube ONLY
E	**BA-93**	**Base Assy. Complete**
1	PJ-100L	Die-Cast Joint Assy. Complete
1-A	NP-366	Nylon Bushing
1-B	UGN-6	Die-Cast Wing Nut w/Washer
1-C	SC-169	Clamp Bolt
2	UGB-815S	Die-Cast Wing Bolt
3	RB-008	Rubber Tip (one each)

TC-1030B

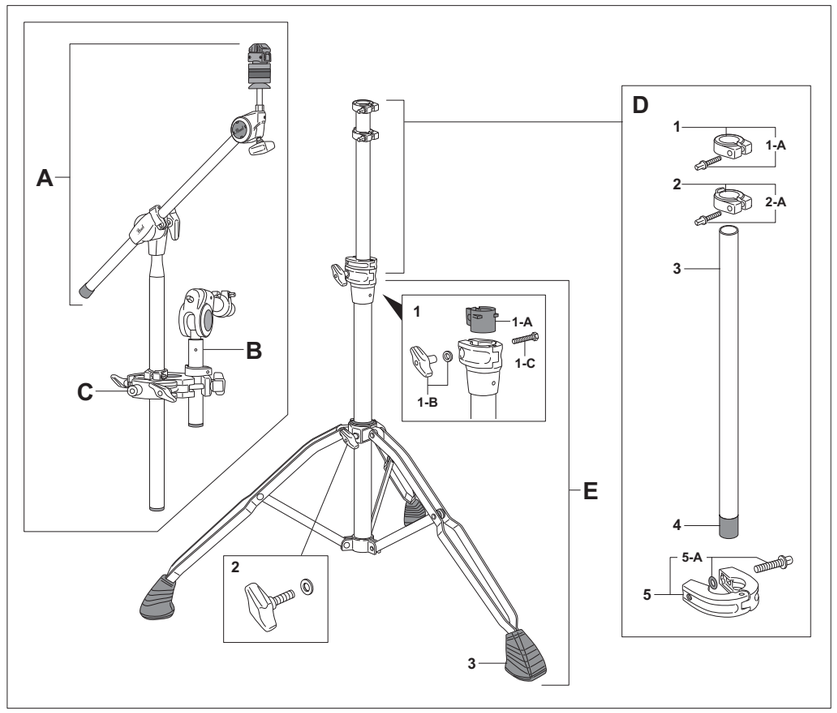

A	**CH-1030B**	**Cymbal Holder**
B	**TH-1030S**	**Tom Holder, Short**
C	**ADP-30**	**Adapter - Please refer to the Adapter section**
D	**UT-T103**	**Upper Tube Assy. Complete**
1	ZD-081TA	Stop Lock Complete
1-A	KB-625	Key Bolt
2	ZD-081A	Stop Lock Complete
2-A	KB-625	Key Bolt
3	TU-90T	Upper Tube ONLY
4	NP-376	Plastic Tip
5	ZD-104A	Stop Lock Complete
5-A	KB-625O	Key Bolt w/O-Ring
E	**BA-103**	**Base Assy. Complete**
1	PJ-100L	Die-Cast Joint Assy. Complete
1-A	NP-366	Nylon Bushing
1-B	UGN-6	Die-Cast Wing Nut w/Washer
1-C	SC-169	Clamp Bolt
2	UGB-815SW	Die-Cast Wing Bolt w/Washer
3	RB-001	Rubber Tip (one each)

DRUM RACKS

DR-501 / 501C / 501E / 501CE

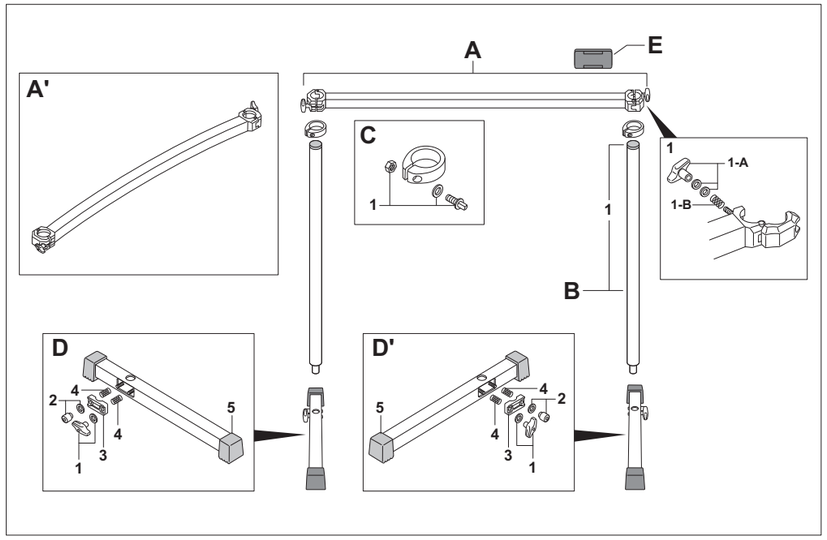

A	**AL-18A**	**Straight Rack Bar Complete**
1	DC-424A	Die-Cast Clamp Assy. Complete
1-A	UGN-8W	Die-Cast Wing Nut w/Washers
1-B	SP-57	Spring
A'	**AL-28AC**	**Curved Rack Bar Complete**
B	**P-38800A**	**Steel Leg**
1	NP-338	Plastic Cap
C	**DC-426A**	**Stop Lock Complete**
1	KB-625A	Key Bolt w/Washer & Hexagonal Nut
D	**KP-38500LA**	**Floor Bar Assy. Complete (Left Side)**
1	UGN-8	Die-Cast Wing Nut w/Washer
2	M-8RN	Knurled Round Nut w/Washer
3	DC-366	Die-Cast Link
4	SG-006N	Spring (one each)
5	NP-188	Rubber Foot (one each)
D'	**KP-38500RA**	**Floor Bar Assy. Complete (Right Side)**
1	UGN-8	Die-Cast Wing Nut w/Washer
2	M-8RN	Knurled Round Nut w/Washer
3	DC-366	Die-Cast Link
4	SG-006N	Spring (one each)
5	NP-188	Rubber Foot (one each)
E	**NP-394**	**Clip on Logo**

DR-503 / 503C

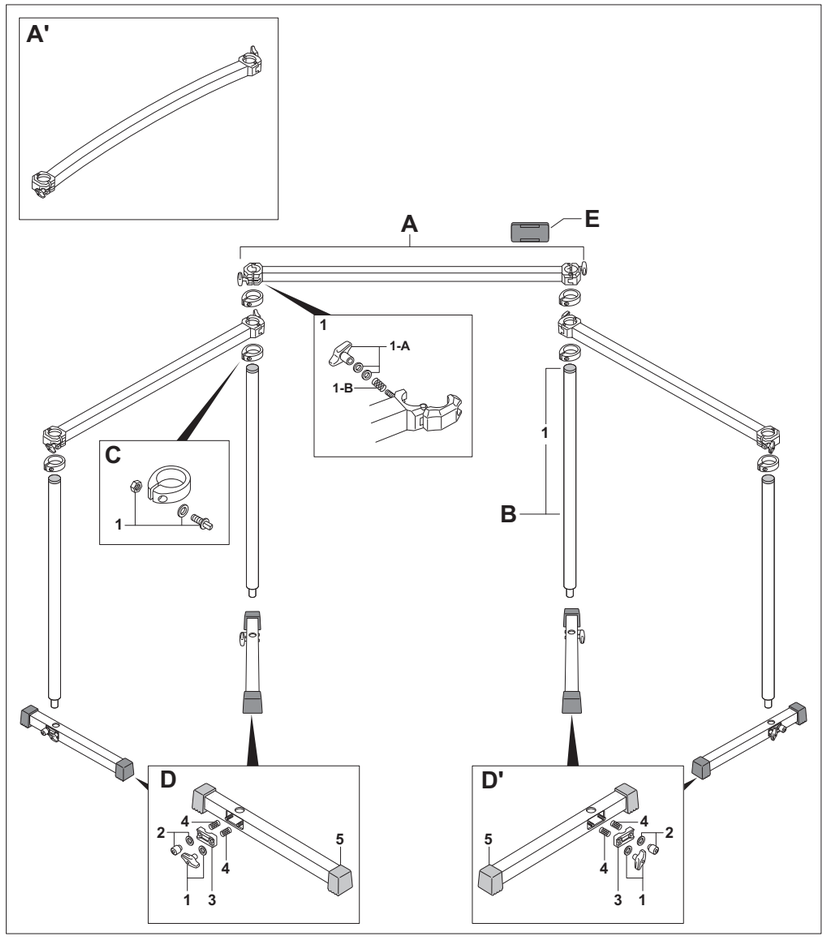

A	**AL-18A**	**Straight Rack Bar Complete**
1	DC-424A	Die-Cast Clamp Assy. Complete
1-A	UGN-8W	Die-Cast Wing Nut w/Washers
1-B	SP-57	Spring
A'	**AL-28AC**	**Curved Rack Bar Complete**
B	**P-38800A**	**Steel Leg**
1	NP-338	Plastic Cap
C	**DC-426A**	**Stop Lock Complete**
1	KB-625A	Key Bolt w/Washer & Hexagonal Nut
D	**KP-38500LA**	**Floor Bar Assy. Complete (Left Side)**
1	UGN-8	Die-Cast Wing Nut w/Washer
2	M-8RN	Knurled Round Nut w/Washer
3	DC-366	Die-Cast Link
4	SG-006N	Spring (one each)
5	NP-188	Rubber Foot (one each)
D'	**KP-38500RA**	**Floor Bar Assy. Complete (Right Side)**
1	UGN-8	Die-Cast Wing Nut w/Washer
2	M-8RN	Knurled Round Nut w/Washer
3	DC-366	Die-Cast Link
4	SG-006N	Spring (one each)
5	NP-188	Rubber Foot (one each)
E	**NP-394**	**Clip on Logo**

DRUM RACKS, PIPE CLAMPS, RACK JOINT

DR-80

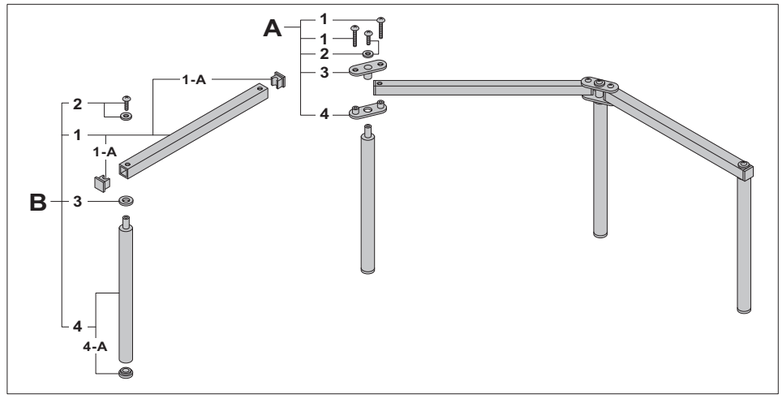

A	**DR-JC1**	**Joint Assy. Complete**
1	SC-202	Bolt (Long) (one each)
2	SC-228A	Bolt w/Washer (Short)
3	LKP-7	Upper Link Plate w/Leg Bracket
4	LKP-4	Lower Link Plate w/Nuts

B	**DR-008**	**Expansion Unit Complete**
1	AL-13	Bar w/End Caps
1-A	NP-162	End Cap (one each)
2	SC-228A	Bolt w/Washer (Short)
3	PR-282	Leg Spacer
4	120N	Leg w/Leg Cap
4-A	NP-163	Leg Cap

PC-8

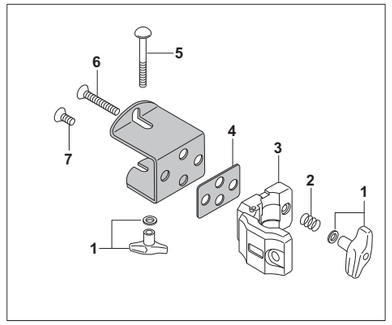

1	UGN-8	Die-Cast Wing Nut w/Washer (one each)
2	SG-006N	Spring
3	DC-422A	Hinged Clamp ONLY
4	GA-45N	Gasket
5	SC-160	Carriage Bolt
6	SC-205	Clamp Bolt, Long
7	SC-279	Clamp Bolt, Short

PCX-100

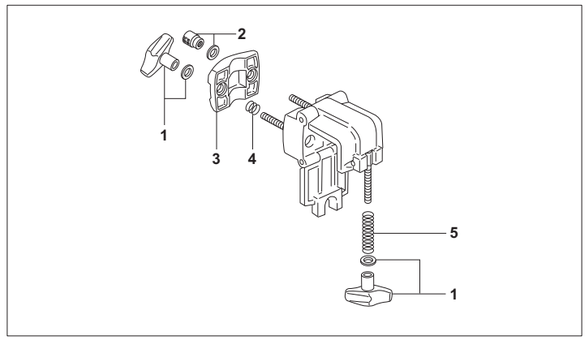

1	UGN-8	Die-Cast Wing Nut w/Washer (one set)
2	M-8RN	Knurled Round Nut w/Washer
3	DC-587	Die-Cast Link
4	SG-006N	Spring
5	SG-009	Spring

PCX-200

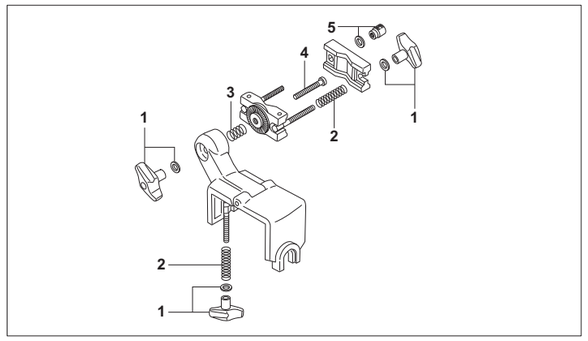

1	UGN-8	Die-Cast Wing Nut w/Washer (one set)
2	SG-009	Spring
3	SP-36	Spring
4	SC-144	Center Bolt
5	M-8RN	Knurled Round Nut w/Washer

RJ-50

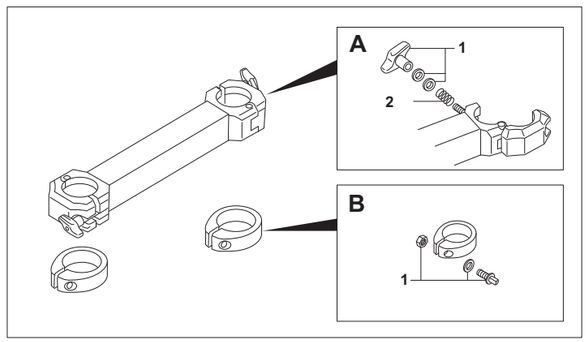

A	**DC-424A**	**Die-Cast Clamp Assy. Complete**
1	UGN-8W	Die-Cast Wing Nut w/Washers
2	SP-57	Spring
B	**DC-426A**	**Stop Lock Complete**
1	KB-625A	Key Bolt w/Washer & Hexagonal Nut

PCL-100

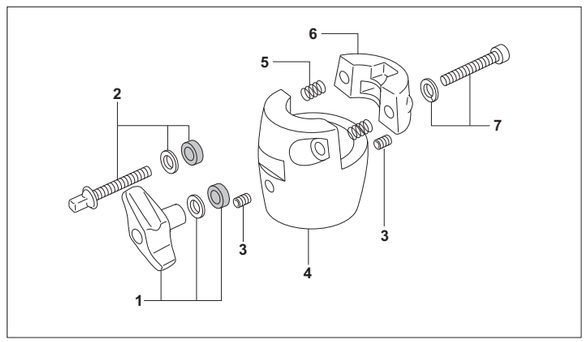

1	UGN-6W	Die-Cast Wing Nut w/Washers
2	KB-630W	Key Bolt w/Washers
3	SB-66	Allen Screw (one each)
4	DC-544	Pipe Bracket
5	SG-004	Spring (one each)
6	DC-545	Clamp Bracket
7	SC-341W	Bolt w/Washer

OPTIMOUNT, OPTI-LOC

OptiMount Suspension System

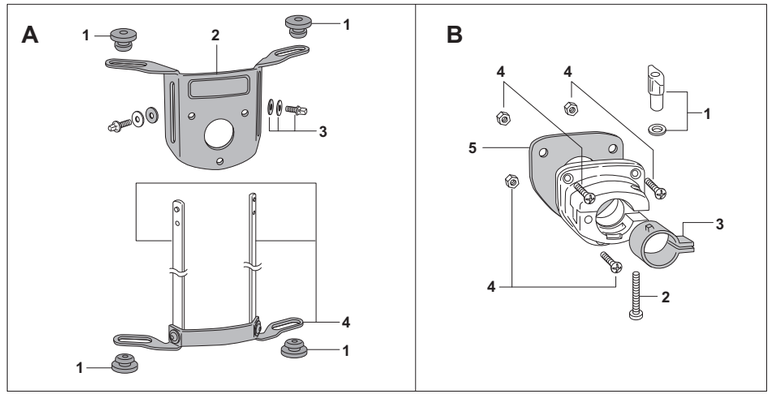

A	**OPT-78**	**Optimount w/o BT-3 (for OPT-0708)**
	OPT-91	**Optimount w/o BT-3 (for OPT-0910)**
	OPT-112	**Optimount w/o BT-3 (for OPT-1112)**
	OPT-134	**Optimount w/o BT-3 (for OPT-1314)**
	OPT-156	**Optimount w/o BT-3 (for OPT-1516)**
1	NP-265	Mounting Rubber (one each)
2	PR-528	Bracket Mounting Plate ONLY
3	KB-615WB	Key Bolt w/Washers
4	PR-529A	Lower Mounting Plate Assy. * (for OPT-0708)
	PR-530A	Lower Mounting Plate Assy. * (for OPT-0910)
	PR-531A	Lower Mounting Plate Assy. * (for OPT-1112)
	PR-532A	Lower Mounting Plate Assy. * (for OPT-1314)
	PR-537A	Lower Mounting Plate Assy. * (for OPT-1516) (one set)

* (Includes Lower Mounting Plate and 1pr. connecting struts ONLY)

B	**BT-3-OPT**	**Mounting Bracket**
1	UGN-6	Die-Cast Wing Nut w/Washer
2	SC-68	Clamp Bolt
3	NP-65	Nylon Bushing
4	IS-MS	Mounting Screw & Nut (one set)
5	NP-260P	Gasket

Aluminum OptiMount Suspension System

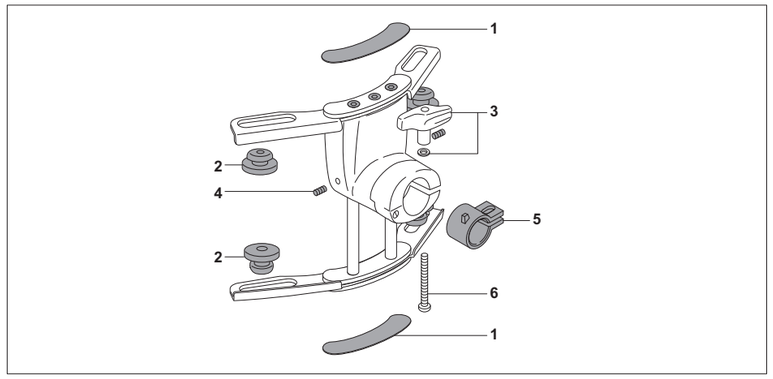

1	DDC-OPTA	Logo Sticker
2	NP-419	Rubber Grommet (one each)
3	UGN-6	Die-Cast Wing Nut w/Washer
4	SB-66	Allen Screw (one each)
5	NP-420	Nylon Bushing
6	SC-68	Clamp Bolt

Opti-Loc (OPL)

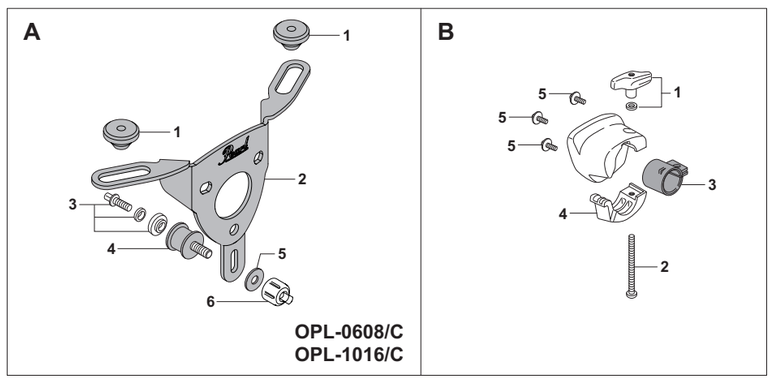

A	**OPL-68**	**Opti-Loc w/o BT-300 (for OPL-0608/C)**
1	RB-021	Mounting Rubber (one each)
2	OBP-0608	Bracket Mounting Plate (for OPL-0608/C)
3	KB-620WS	Key Bolt w/Washer & Spacer
4	OSR-1	Rubber Suspension Post
5	NP-270	Fiber Washer
6	ZD-145	Key Nut
A	**OPL-16**	**Opti-Loc w/o BT-300 (for OPL-1016/C)**
1	RB-021	Mounting Rubber (one each)
2	OBP-1016	Bracket Mounting Plate (for OPL-1016/C)
3	KB-620WS	Key Bolt w/Washer & Spacer
4	OSR-1	Rubber Suspension Post
5	NP-270	Fiber Washer
6	ZD-145	Key Nut
B	**BT-300-OPL**	**Mounting Bracket**
1	UGN-6	Die-Cast Wing Nut w/Washer
2	SC-394	Clamp Bolt
3	PL-020	Nylon Bushing
4	ZD-048	Clamp
5	SC-145L	Mounting Screw w/Washer (one each)

TOM HOLDER BASES, BRACKETS

BB-3

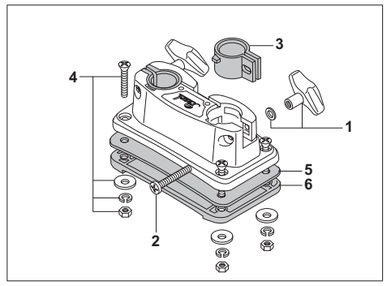

1	UGN-6	Die-Cast Wing Nut w/Washer (one set)
2	SC-68	Clamp Bolt (one each)
3	NP-65	Nylon Bushing (one each)
4	B-MS	Mounting Screw, Washers & Nut (one set)
5	NP-259P	Rubber Gasket
6	NP-185	Set Plate

BB-70

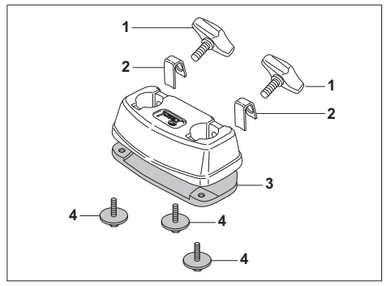

1	UGB-815S	Die-Cast Wing Bolt (one each)
2	HP-BP	Steel Bracket (one each)
3	NP-611	Set Plate
4	SC-233R	Mounting Screw w/Washer (one each)

BT-3

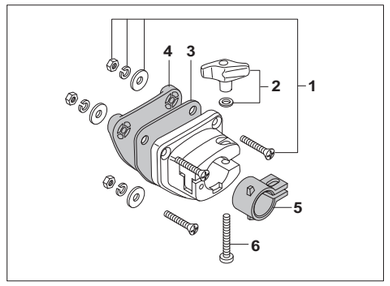

1	T-MS	Mounting Screw, Washers & Nut (one set)
2	UGN-6	Die-Cast Wing Nut w/Washer
3	NP-260P	Gasket
4	NP-186	Set Plate
5	NP-65	Nylon Bushing
6	SC-68	Clamp Bolt

BB-300/C

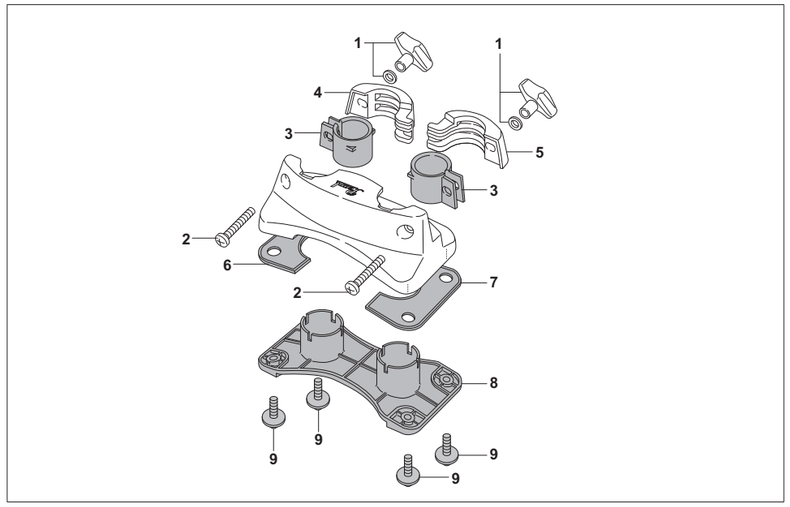

1	UGN-6	Die-Cast Wing Nut w/Washer (one set)
2	SC-394	Clamp Bolt (one each)
3	PL-020	Nylon Bushing (one each)
4	ZD-043	Clamp, Right Side
5	ZD-044	Clamp, Left Side
6	PL-026N	Rubber Gasket, Left Side for 22" & 24"
	PL-024	Rubber Gasket, Left Side for 20"
7	PL-027N	Rubber Gasket, Right Side for 22" & 24"
	PL-025	Rubber Gasket, Right Side for 20"
8	PL-023	Set Plate
9	SC-413R	Mounting Screw w/Washer (6 ply-one each)
	SC-413R	Mounting Screw w/Washer (Thin 6 ply-one each)

BASS DRUM SPURS

SP-300

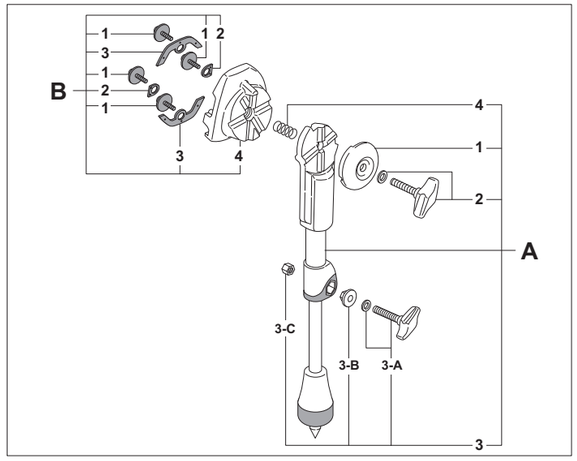

A	**SP-300A**	**Spur Assy. Complete**	**B**	**SPB-300**	**Spur Bracket Complete**
1	DC-667	Outer Cap	1	SM-512B	Mounting Screw w/Washer (6 ply-one each)
2	UGB-835WA	Die-Cast Wing Bolt w/Washer		SM-514B	Mounting Screw w/Washer (8 ply-one each)
3	SP-300D	Die-Cast Wing Bolt Set	2	NP-415P	Rubber Gasket (one each)
3-A	UGB-628W	Die-Cast Wing Bolt w/Washer	3	NP-414P	Rubber Gasket (one each)
3-B	DC-664	Hexagonal Washer	4	DC-661	Spur Bracket ONLY
3-C	DC-665	Hexagonal Nut			
4	SP-020	Spring			

SP-30

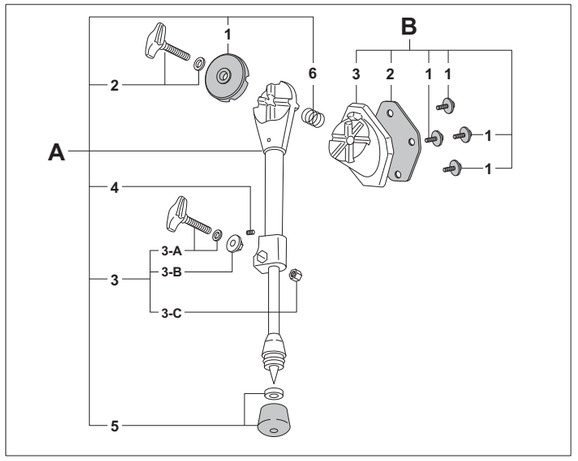

A	**SP-30A**	**Spur Assy. Complete**	**B**	**SP-30E**	**Spur Bracket Complete**
1	SP-30C	Outer Cap	1	SM-512B	Mounting Screw w/Washer (one each)
2	UGB-835WA	Die-Cast Wing Bolt w/Washer	2	NP-244P	Rubber Gasket
3	SP-30D	Die-Cast Wing Bolt Set	3	DC-88	Spur Bracket ONLY
3-A	UGB-628W	Die-Cast Wing Bolt w/Washer			
3-B	DC-91	Hexagonal Washer			
3-C	ME-90	Hexagonal Nut			
4	SB-55	Allen Screw			
5	R-30A	Rubber Tip w/Washer			
6	SP-205	Spring			

BSP-70

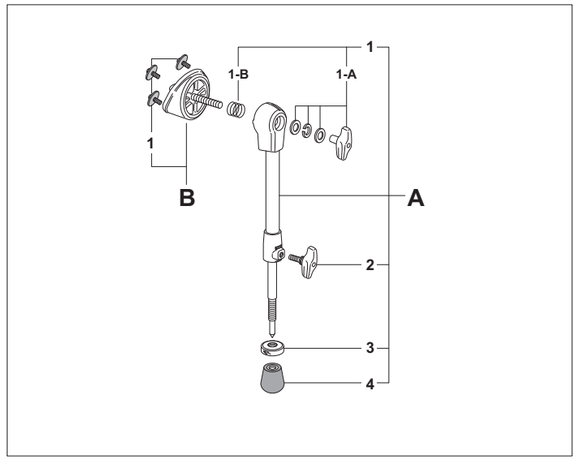

A	**SP-70A**	**Spur Assy. Complete**
1	SP-20B	Die-Cast Wing Nut w/Washer and Spring
1-A	UGN-8TW	Die-Cast Wing Nut w/Washer
1-B	SG-011	Spring
2	UGB-610	Die-Cast Wing Bolt
3	RHA-1T	Lock Nut
4	RHS-1R	Rubber Tip
B	**SPB-70A**	**Spur Bracket Complete**
1	SC-3DT	Mounting Screw w/Washer (one each)

FLOOR TOM LEG BRACKETS & LEGS

LB-200 / LG-200

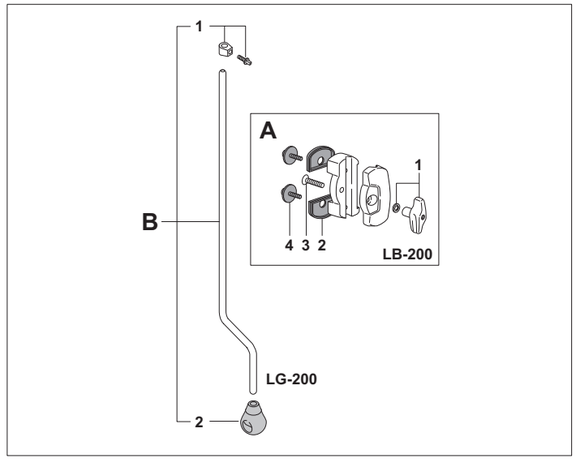

A	**LB-200**	**Floor Tom Leg Bracket Assy. Complete**
1	UGN-6	Die-Cast Wing Nut w/Washer
2	NP-413	Rubber Gasket (one each)
3	SC-365	Screw
4	SM-514B	Mounting Screw w/Washer (one each)
B	**LG-200**	**Floor Tom Leg Complete w/Stop Lock & Rubber Tip**
1	LG-02NS	Stop Lock Complete
2	R-40	Air Suspension Rubber Tip

LB-40 / LG-40

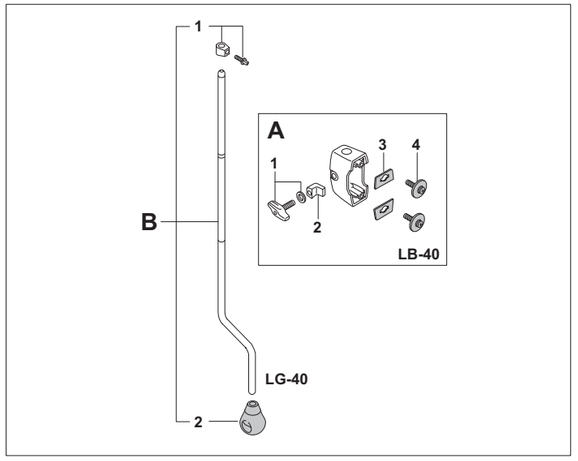

A	**LB-40**	**Floor Tom Leg Bracket Assy. Complete**
1	UGB-620	Die-Cast Wing Bolt w/Washer
2	DC-337	Lock Nut
3	NP-245P	Rubber Gasket (one each)
4	SM-512BW	Mounting Screw w/Washer (4 ply-one each)
	SM-514BW	Mounting Screw w/Washer (6 ply-one each)
B	**LG-40**	**Floor Tom Leg Complete w/Stop Lock & Rubber Tip**
1	LG-04S	Stop Lock Complete
2	R-40	Air Suspension Rubber Tip

FTB-07 / FTL-07R

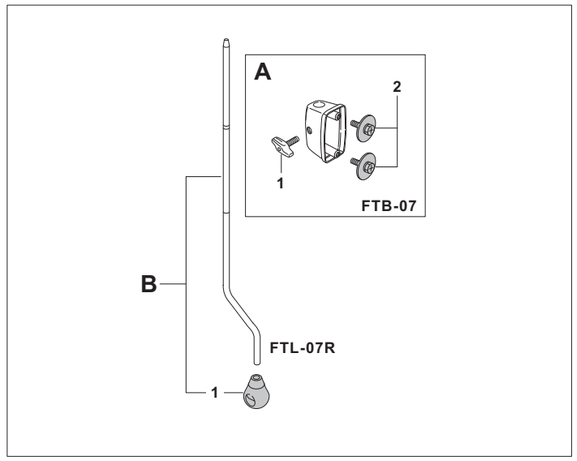

A	**FTB-07**	**Floor Tom Leg Bracket Assy. Complete**
1	UGB-815S	Die-Cast Wing Bolt
2	SC-3DT	Mounting Screw w/Washer (one each)
B	**FTL-07R**	**Floor Tom Leg Complete w/Rubber Tip**
1	R-40	Rubber Tip

FTB-07 / FTL-07

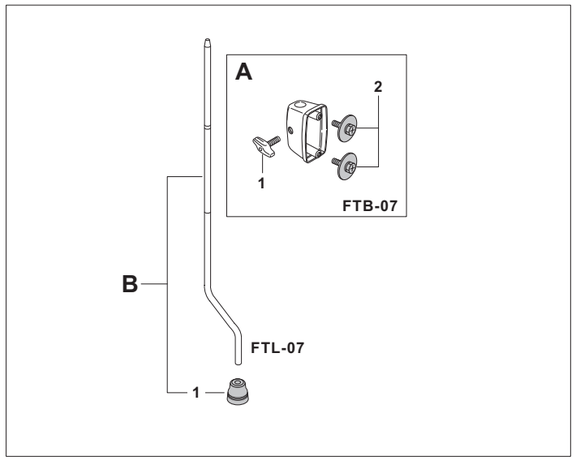

A	**FTB-07**	**Floor Tom Leg Bracket Assy. Complete**
1	UGB-815S	Die-Cast Wing Bolt
2	SC-3DT	Mounting Screw w/Washer (one each)
B	**FTL-07**	**Floor Tom Leg Complete w/Rubber Tip**
1	R-5	Rubber Tip

STOP LOCKS

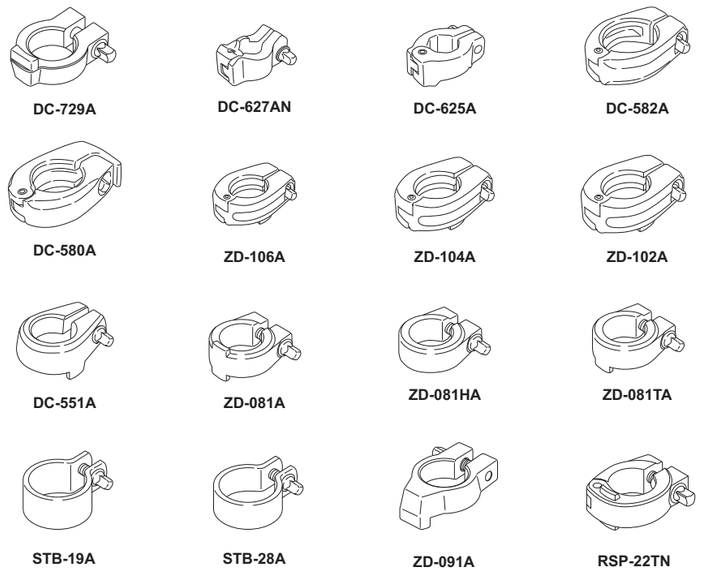

Number	Application
DC-729A	D-1000N, D-1000SN, D-1000SPN, D-2500, D-2500BR
DC-627AN	CLH-930, BC-2030
DC-625A	B-1030, BC-2030, CH-1030B
DC-582A	BC-2030
DC-580A	D-1000SPN
ZD-106A	BC-2030
ZD-104A	H-930, BC-2030, T-1030, TC-1030B
ZD-102A	H-1050, H-2050
DC-551A	D-930
ZD-081A	CLH-930, JG-16, JG-16NK, CH-830, CH-830S, CH-930, UX-80 / 80S, TH-70I / 70S, TH-88I / 88S, T-930, T-1030, TC-930, TC-1030B
ZD-081HA	D-730S
ZD-081TA	T-930, T-1030, TC-930, TC-1030B
STB-28A	D-790, D-930
ZD-091A	D-790
RSP-22TN	CH-1030B, TH-900I / 900S, TH-1030 / 1030I / 1030S
STB-19A	S-150S

SNARE WIRES

Model#	Strands	Size	Material
SN-1320C	20	13″	Ultra-Sound Snare Wire, C-type, w/strap & cord
SN-1420C	20	14″	Ultra-Sound Snare Wire, C-type, w/strap & cord
SN-1442C	42	14″	Ultra-Sound Snare Wire, C-type, w/strap & cord
SN-1320D	20	13″	Ultra-Sound Snare Wire, D-type, w/strap & cord
SN-1420D	20	14″	Ultra-Sound Snare Wire, D-type, w/strap & cord
SN-1442D	42	14″	Ultra-Sound Snare Wire, D-type, w/strap & cord
SN-1320I	20	13″	Ultra-Sound Snare Wire, I -type, w/strap & cord
SN-1420I	20	14″	Ultra-Sound Snare Wire, I -type, w/strap & cord
SN-1442I	42	14″	Ultra-Sound Snare Wire, I -type, w/strap & cord
SN-1520I	20	15″	Ultra-Sound Snare Wire, I -type, w/strap & cord

Model#	Strands	Size	Material
S-022	20	14″	High Carbon Steel,Straps
S-022N	20	14″	High Carbon Steel,Cords
S-025	20	14″ (for SR-010)	High Carbon Steel
S-029N	20	13″	High Carbon Steel
S-030N	24	14″	High Carbon Steel
S-031N	20	12″	High Carbon Steel
S-032N	16	10″	High Carbon Steel
S-033N	16	12″	High Carbon Steel
S-040	15	14″	Steel, thinner gauge
S-041	15	14″	Bronze, thicker gauge

HOOPS

Super Hoop Ⅱ, Regular Steel Hoops

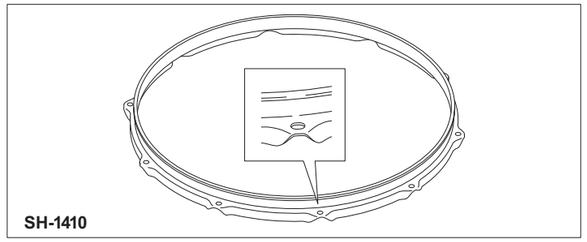

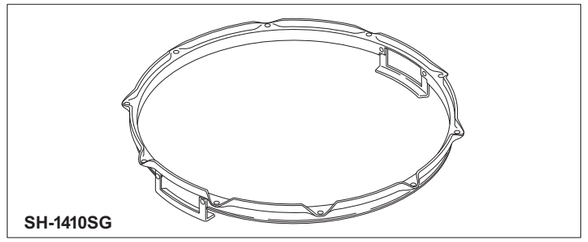

Super Hoop Ⅱ

Number	Dia.	Description
SH-0604	6″	4 rod
SH-0805	8″	5 rod
SH-1006	10″	6 rod
SH-1006S	10″	6 rod, snare side
SH-1206	12″	6 rod
SH-1208	12″	8 rod
SH-1208S	12″	8 rod, snare side
SH-1306	13″	6 rod

Number	Dia.	Description
SH-1408	14″	8 rod
SH-1408S	14″	8 rod, snare side
SH-1410B	14″	10 rod, batter side
SH-1410S	14″	10 rod, snare side
SH-1410SG	14″	10 rod, snare side w/guard
SH-1508	15″	8 rod
SH-1608	16″	8 rod
SH-1808	18″	8 rod

Regular Steel Hoops

Number	Dia.	Description
RIM-0804	8″	4 rod
RIM-1006	10″	6 rod
RIM-1206	12″	6 rod
RIM-1306	13″	6 rod
RIM-1308B	13″	8 rod, batter side
RIM-1308S	13″	8 rod, snare side
RIM-1406	14″	6 rod

Number	Dia.	Description
RIM-1408B	14″	8 rod, batter side
RIM-1408S	14″	8 rod, snare side
RIM-1410B	14″	10 rod, batter side
RIM-1410S	14″	10 rod, snare side
RIM-1606	16″	6 rod
RIM-1608	16″	8 rod
RIM-1808	18″	8 rod

FatTone Hoops

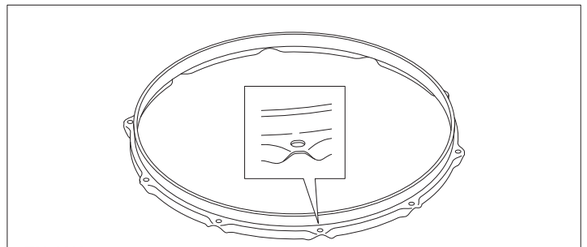

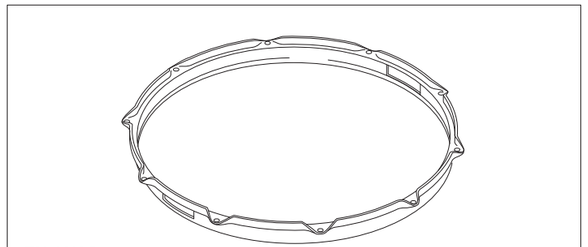

Number	Dia.	Description
FH-0805	8″	5 rod
FH-1006	10″	6 rod
FH-1206	12″	6 rod
FH-1306	13″	6 rod
FH-1308	13″	8 rod
FH-1308S	13″	8 rod, snare side

Number	Dia.	Description
FH-1408	14″	8 rod
FH-1410	14″	10 rod
FH-1410S	14″	10 rod, snare side
FH-1508	15″	8 rod
FH-1608	16″	8 rod
FH-1808	18″	8 rod

Die-Cast Hoops

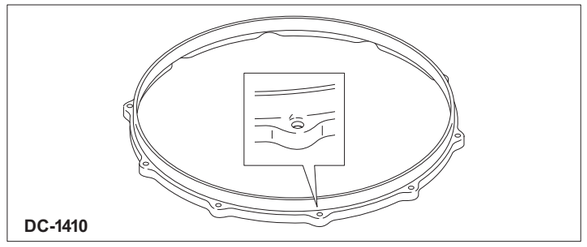

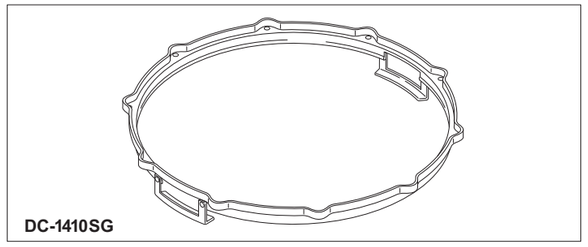

Number	Dia.	Description
DC-0805	8″	5 rod
DC-1006	10″	6 rod
DC-1206	12″	6 rod
DC-1306	13″	6 rod
DC-1308	13″	8 rod
DC-1308S	13″	8 rod, snare side

Number	Dia.	Description
DC-1408	14″	8 rod
DC-1408S	14″	8 rod, snare side
DC-1410	14″	10 rod
DC-1410S	14″	10 rod, snare side
DC-1410SG	14″	10 rod, snare side w/guard
DC-1508	15″	8 rod

Number	Dia.	Description
DC-1508	15″	8 rod
DC-1608	16″	8 rod
DC-1808	18″	8 rod

Bass Drum Hoops / Hoop Protector

Number	Dia.	Application
RIM18W	18″	RF / RFP / Masters
RIM20W	20″	RF / RFP / Masters
RIM22W	22″	RF / RFP / Masters
RIM24W	24″	RF / RFP / Masters
MCTRIM18	18″	MCT
MCTRIM20	20″	MCT
MCTRIM22	22″	MCT
MCTRIM24	24″	MCT

Number	Dia.	Application
SSCRIM18	18″	SSC
SSCRIM20	20″	SSC
SSCRIM22	22″	SSC
SSCRIM24	24″	SSC
FWRIM18	18″	FW
FWRIM20	20″	FW
FWRIM22	22″	FW
FWRIM24	24″	FW

Number	Dia.	Application
RIM20CRB	20″	CRB
RIM22CRB	22″	CRB
RIM24CRB	24″	CRB
DMP20HP-B	20″	DMP
DMP22HP-B	22″	DMP
DMP24HP-B	24″	DMP

Number	Dia.	Application
EXL20HP-B	20″	EXL
EXL22HP-B	22″	EXL
EXL24HP-B	24″	EXL
EXX20HP-B	20″	EXX
EXX22HP-B	22″	EXX
EXX24HP-B	24″	EXX
MDT16HP-B	16″	MDT (batter side)
MDT16HP-F	16″	MDT (front side)

Number	
HPP-2	Metal Hoop Protector
NP-347N	Non-Slip Hoop Protector

SR-1000

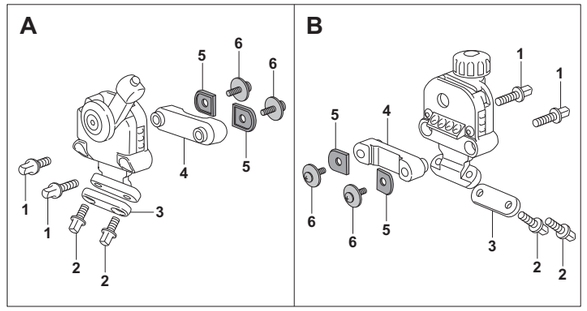

A	SR-1000A	Release Side Assy. Complete
1	KB-615	Key Bolt (one each)
2	KB-510	Key Bolt (one each)
3	DC-684	Snare Mounting Plate
4	DC-685	Snare Setting Plate
5	NP-432P	Rubber Gasket (one each)
6	SM-409	Mounting Screw w/Washer (Metal shell-one each)
	SM-430B	Mounting Screw w/Washer (20 ply-one each)

B	SR-1000E	Butt Side Assy. Complete
1	KB-615	Key Bolt (one each)
2	KB-510	Key Bolt (one each)
3	DC-684	Snare Mounting Plate
4	DC-685	Snare Setting Plate
5	NP-432P	Rubber Gasket (one each)
6	SM-409	Mounting Screw w/Washer (Metal shell-one each)
	SM-430B	Mounting Screw w/Washer (20 ply-one each)

SR-1000/B (Black Chrome)

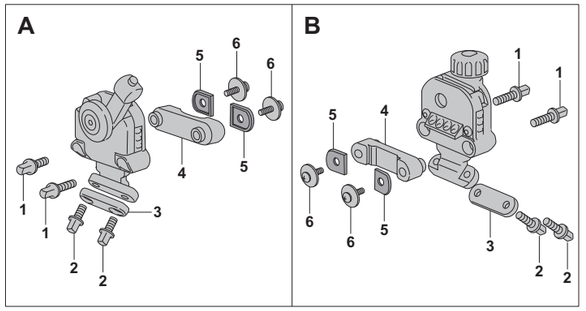

A	SR-1000A/B	Release Side Assy. Complete
1	KB-615B	Key Bolt (one each)
2	KB-510B	Key Bolt (one each)
3	DC-684B	Snare Mounting Plate
4	DC-685B	Snare Setting Plate
5	NP-432P	Rubber Gasket (one each)
6	SM-409	Mounting Screw w/Washer (Metal shell-one each)

B	SR-1000E/B	Butt Side Assy. Complete
1	KB-615B	Key Bolt (one each)
2	KB-510B	Key Bolt (one each)
3	DC-684B	Snare Mounting Plate
4	DC-685B	Snare Setting Plate
5	NP-432P	Rubber Gasket (one each)
6	SM-409	Mounting Screw w/Washer (Metal shell-one each)

SR-017

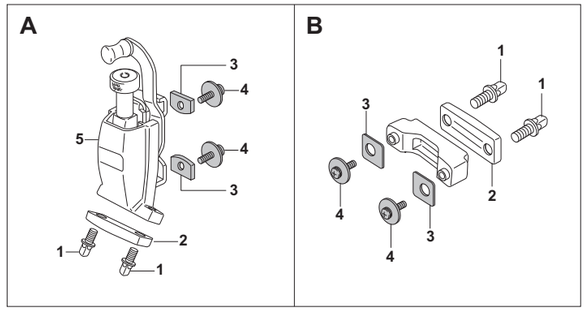

A	SR-17A	Release Side Assy. Complete
1	KB-510	Key Bolt (one each)
2	SR-12D	Snare Mounting Plate
3	NP-249P	Rubber Gasket (one each)
4	SM-514B	Mounting Screw w/Washer (6 ply-one each)
	SM-520B	Mounting Screw w/Washer (10 ply-one each)
	SM-507	Mounting Screw w/Washer (Metal shell-one each)
5	DC-440	Strainer Cover

B	SR-18E	Butt Side Assy. Complete
1	KB-510	Key Bolt (one each)
2	SR-12D	Snare Mounting Plate
3	NP-251P	Rubber Gasket (one each)
4	SM-414B	Mounting Screw w/Washer (6 ply-one each)
	SM-420B	Mounting Screw w/Washer (10 ply-one each)
	SM-411C	Mounting Screw w/Washer (Metal shell-one each)

SR-015

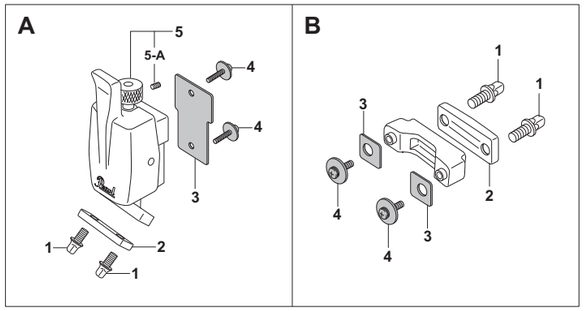

A	SR-15A	Release Side Assy. Complete
1	KB-510	Key Bolt (one each)
2	SR-12D	Snare Mounting Plate
3	NP-248P	Rubber Gasket
4	SM-414B	Mounting Screw w/Washer (4 ply-one each)
	SM-416B	Mounting Screw w/Washer (6 ply-one each)
	SM-418B	Mounting Screw w/Washer (8 ply-one each)
	SM-409	Mounting Screw w/Washer (Metal shell-one each)
5	ME-376A	Adjustment Bolt, Complete
5-A	SB-44	Allen Screw

B	SR-18E	Butt Side Assy. Complete
1	KB-510	Key Bolt (one each)
2	SR-12D	Snare Mounting Plate
3	GK-18SB	Gasket (one each)
4	SM-411B	Mounting Screw w/Washer (4 ply-one each)
	SM-414B	Mounting Screw w/Washer (6 ply-one each)
	SM-416B	Mounting Screw w/Washer (8 ply-one each)
	SM-411C	Mounting Screw w/Washer (Metal shell-one each)

SR-900

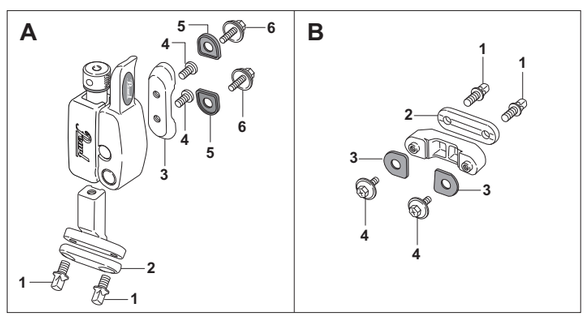

A	SR-900A	Release Side Assy. Complete
1	KB-510	Key Bolt (one each)
2	ZD-012	Snare Mounting Plate
3	ZD-006	Snare Setting Plate
4	SC-391	Screw (one each)
5	PL-013	Rubber Gasket (one each)
6	SM-408C	Mounting Screw w/Washer (Metal shell-one each)
	SM-411B	Mounting Screw w/Washer (Wood shell-one each)

B	SR-900B	Butt Side Assy. Complete
1	KB-510	Key Bolt (one each)
2	ZD-012	Snare Mounting Plate
3	PL-013	Rubber Gasket (one each)
4	SM-408C	Mounting Screw w/Washer (Metal shell-one each)
	SM-411B	Mounting Screw w/Washer (Wood shell-one each)

SR-700

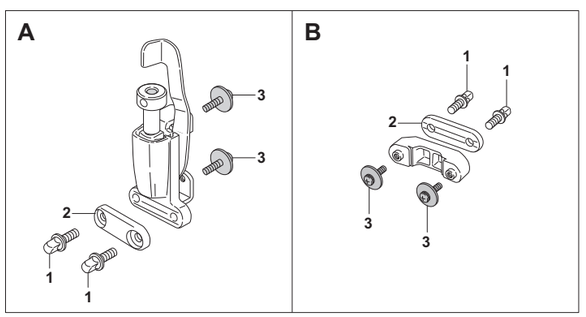

A	SR-700A	Release Side Assy. Complete
1	KB-510	Key Bolt (one each)
2	ZD-012	Snare Mounting Plate
3	SM-414B	Mounting Screw w/Washer (one each)

B	SR-700B	Butt Side Assy. Complete
1	KB-510	Key Bolt (one each)
2	ZD-012	Snare Mounting Plate
3	SM-411B	Mounting Screw w/Washer (one each)

SR-018

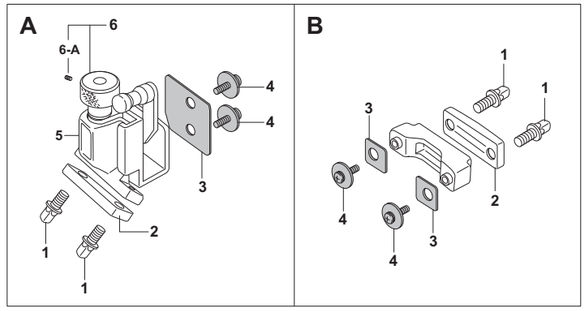

A	SR-18A	Release Side Assy. Complete
1	KB-508	Key Bolt (one each)
2	SR-12D	Snare Mounting Plate
3	NP-250P	Rubber Gasket
4	SM-414B	Mounting Screw w/Washer (6 ply-one each)
	SM-416B	Mounting Screw w/Washer (8 ply-one each)
	SM-411C	Mounting Screw w/Washer (Metal shell-one each)
5	DC-458	Strainer Cover
6	ME-454A	Adjustment Bolt, Complete
6-A	SB-44	Allen Screw

B	SR-18E	Butt Side Assy. Complete
1	KB-510	Key Bolt (one each)
2	SR-12D	Snare Mounting Plate
3	NP-251P	Rubber Gasket (one each)
4	SM-414B	Mounting Screw w/Washer (6 ply-one each)
	SM-416B	Mounting Screw w/Washer (8 ply-one each)
	SM-411C	Mounting Screw w/Washer (Metal shell-one each)

SR-020/N (Nickel Finish)

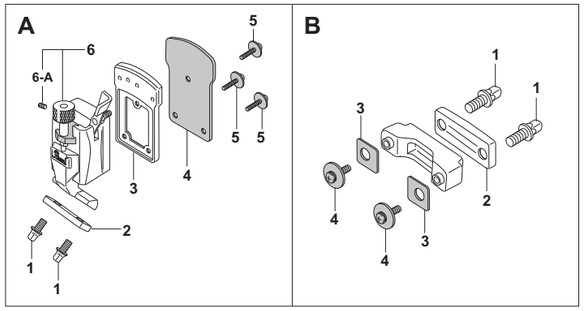

A	SR-20A/N	Release Side Assy. Complete
1	KB-510	Key Bolt (one each)
2	SR-12D/N	Snare Mounting Plate
3	DC-408/N	Trace Plate
4	NP-328P	Rubber Gasket
5	SM-416B	Mounting Screw w/Washer (one each)
6	ME-226AC	Adjustment Bolt, Complete
6-A	SB-44	Allen Screw

B	SR-18E/N	Butt Side Assy. Complete
1	KB-510	Key Bolt (one each)
2	SR-12D/N	Snare Mounting Plate
3	NP-251P	Rubber Gasket (one each)
4	SM-409B	Mounting Screw w/Washer (one each)

SR-150

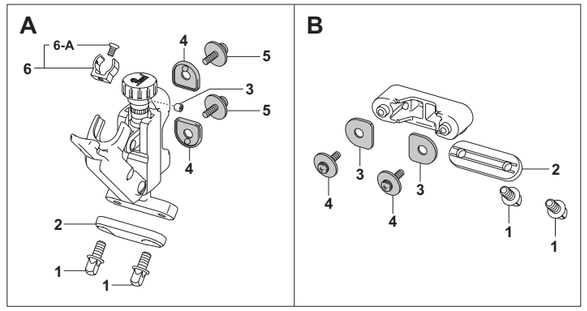

A	SR-150A	Release Side Assy. Complete
1	KB-510	Key Bolt (one each)
2	DC-684	Snare Mounting Plate
3	SB-44	Allen Screw
4	NP-522	Rubber Gasket (one each)
5	SM-512B	Mounting Screw w/Washer (4 ply-one each)
	SM-512B	Mounting Screw w/Washer (Thin 6 ply-one each)
	SC-145N	Mounting Screw w/Washer (Metal shell-one each)
6	NP-521A	Lock Clip Assy.
6-A	SC-327S	Flat Head Screw

B	SR-150E	Butt Side Assy. Complete
1	KB-510	Key Bolt (one each)
2	DC-684	Snare Mounting Plate
3	NP-522	Rubber Gasket (one each)
4	SM-411B	Mounting Screw w/Washer (4 ply-one each)
	SM-411B	Mounting Screw w/Washer (Thin 6 ply-one each)
	SM-411C	Mounting Screw w/Washer (Metal shell-one each)

SR-160F

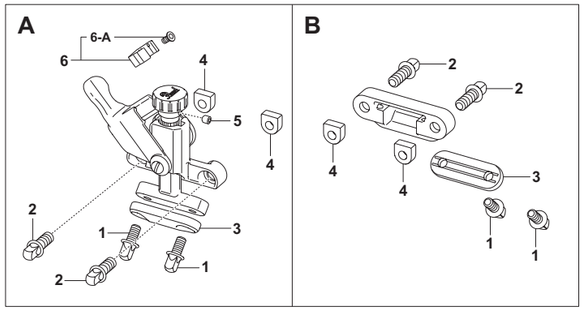

A	SR-160FA	Release Side Assy. Complete
1	KB-510	Key Bolt (one each)
2	SC-477	Key Bolt (one each)
3	DC-684	Snare Mounting Plate
4	ME-675	D-Nut (one each)
5	SB-44	Allen Screw
6	NP-521A	Lock Clip Assy.
6-A	SC-327S	Flat Head Screw

B	SR-160FE	Butt Side Assy. Complete
1	KB-510	Key Bolt (one each)
2	SC-477	Key Bolt (one each)
3	DC-684	Snare Mounting Plate
4	ME-675	D-Nut (one each)

LUGS

Lugs for Snare Drum

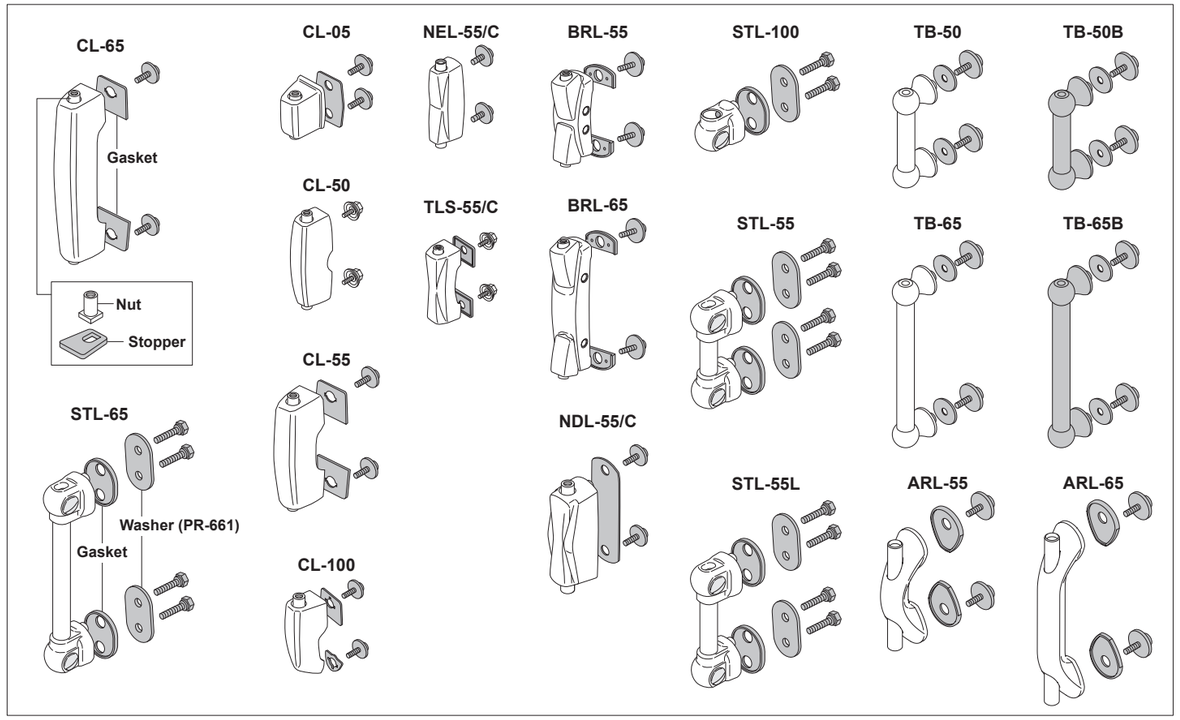

Number	Nut	Stopper	Gasket	Screw						Application
				METAL	4PLY	6PLY	6PLY,Thin	8PLY	20PLY	
CL-05	ME-256US	NP-135N	NP-257P	SM-411C	---	SM-414B	---	---	---	M1330, B1330, S1330B
CL-50	DC-6FE	NP-135N	---	SM-411C	---	---	---	SM-416B	---	FCP, FCS
CL-55	DC-6US	NP-135N	NP-240P	SM-411C	SM-411B	SM-414B	---	---	---	5.5" Deep MCT, SSC, OH1350
CL-65	DC-6US	NP-135N	NP-240P	SM-411C	SM-411B	SM-414B	---	---	---	6.5" Deep MCT, SSC, JJ1365N, M1060
CL-100	DC-6US	NP-135N	NP-240P (Large) NP-241P (Small)	SM-411C	SM-411B	SM-414B	---	SM-416B	---	M1270
BRL-55	DC-6RS	NP-408	NP-410P	SM-411C	---	---	---	---	SM-432B	5" Deep RF, RFB, RFS
BRL-65	DC-6RS	NP-408	NP-410P	SM-411C	---	---	---	---	SM-432B	6.5" Deep RF, RFB, RFS
STL-100	---	---	NP-444P	SC-400R	---	SC-399R	---	---	---	Hybrid Exotic, DC1450S/N
STL-55	---	---	NP-444P	---	SC-400R	SC-399R	---	---	---	5.5" Deep MRV
STL-55L	---	---	NP-444P	---	---	---	SC-400R	---	---	5" Deep RFP
STL-65	---	---	NP-444P	---	SC-400R	SC-399R	SC-400R	---	---	6.5" Deep RFP, MRV
TB-50	---	---	NP-340P	SM-411C	---	---	---	---	---	5" Deep SensiTone
TB-65	---	---	NP-340P	SM-411C	---	---	---	---	---	IP1465, 6.5" Deep SensiTone
ARL-55	---	---	NP-524	SM-411C	SM-411B	---	SM-411B	---	---	5" Deep SensiTone Premium
ARL-65	---	---	NP-524	SM-411C	---	---	SM-411B	---	---	6.5" Deep SensiTone Premium
TLS-55/C	DC-6FE	PL-16	PL-19F	SM-408C	---	SM-411B	---	---	---	SS1455S
NDL-55/C	DC-6FE	PL-043	PL-060	---	---	SM-411B	---	---	---	DMP
NEL-55/C	DC-6FE	PL-043	---	---	---	SM-411B	---	---	---	EXL, EXX, MDT

Lugs for Bass Drum

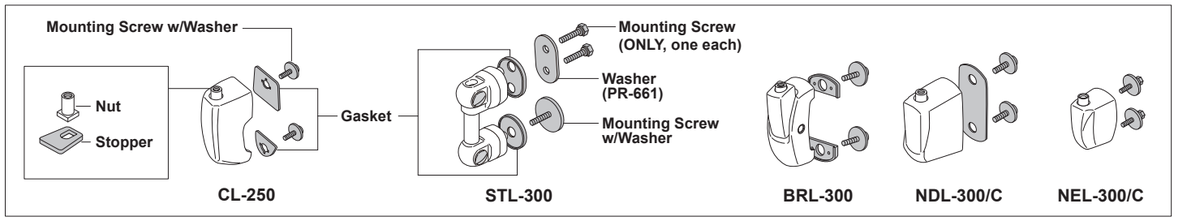

Number	Nut	Stopper	Gasket	Screw					Application
				4PLY	6PLY	6PLY, Thin	8PLY	8PLY, Thin	
STL-300	---	---	NP-444P (Large) NP-497 (Small)	--- ---	--- ---	SC-404R SM-418B	--- ---	SC-414R SM-420B	RFP
BRL-300	DC-5US	NP-408N	NP-408P	---	SM-414B	---	SM-416B	---	RF
CL-250	DC-5US	NP-225	NP-262P (Large) NP-263P (Small)	SM-411B	---	SM-411B	---	---	MRV, MCT
NDL-300/C	DC-6FE	PL-044	PL-061	---	---	SM-411B	---	---	DMP
NEL-300/C	DC-6FE	PL-044	---	---	SM-411B	---	---	---	EXL, EXX, MDT

LUGS, BOLTS, TENSION CLAWS

Lugs for Tom Toms

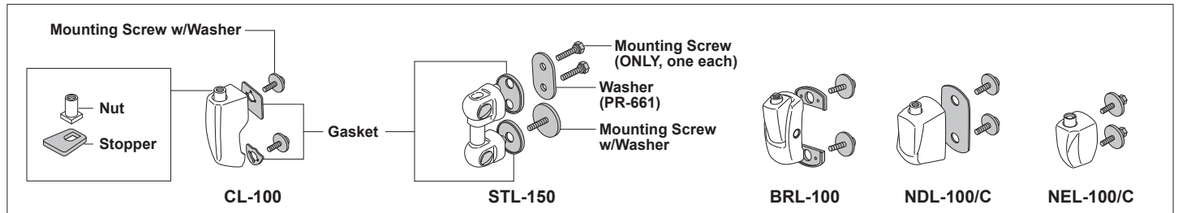

Number	Nut	Stopper	Gasket	Screw					Application
				4PLY	6PLY	6PLY, Thin	8PLY	8PLY, Thin	
STL-150	---	---	NP-444P (Large) NP-497 (Small)	--- ---	--- ---	SC-404R SM-418B	--- ---	SC-414R SM-420B	RFP
BRL-100	DC-6RS	NP-408N	NP-410P	---	SM-414B	---	SM-416B	---	RF
CL-100	DC-6US	NP-135N	NP-240P (Large) NP-241P (Large)	SM-411B	SM-414B	SM-411B	---	---	MRV, MCT
NDL-100/C	DC-6FE	PL-043	PL-059	---	---	SM-411B	---	---	DMP
NEL-100/C	DC-6FE	PL-043	---	---	SM-411B	---	---	---	EXL, EXX, MDT

Bass Drum Tension Claws & Bolts

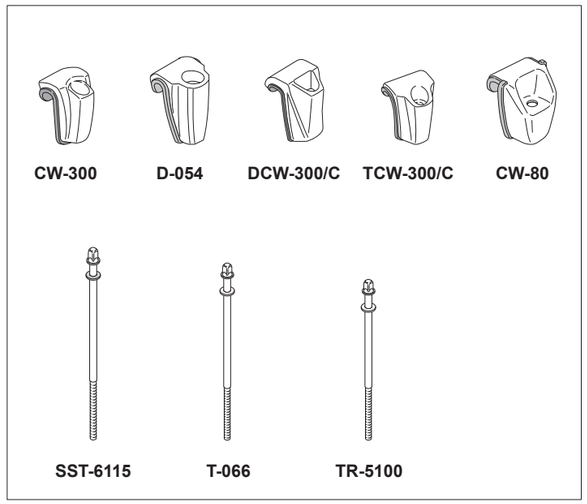

	Number	Application
Claws	CW-300	RF, RFP, MRV
	D-054	MCT, SSC, FW
	DCW-300/C	DMP
	TCW-300/C	VISION
	CW-80	EXPORT/MDT
Bolts	SST-6115	M6 x 115mm for RF, RFP, MRV
	T-066	M6 x 115mm for MCT, SSC, FW
	TR-5100	W7/32 x 100mm for DMP, EXL, EXX, MDT

Tension Key Rods

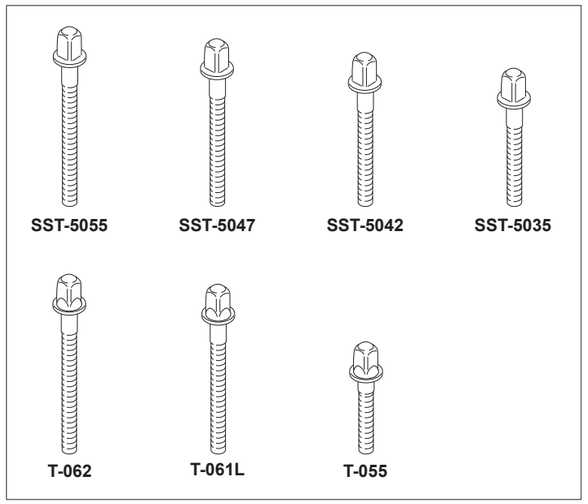

Number	Dia X Length	Application
SST-5055	W7/32 x 55mm	5.5" Deep MRV Snare Drums
SST-5047	W7/32 x 47mm	RF / RFP / 6.5" Deep MRV Snare Drums, SensiTone Snare Drum, Hybrid Exotic Snare Drums (snare side ONLY), OH1350, DC1450S/N JJ1365N, M1270, RF / RFP / MRV Toms
SST-5042	W7/32 x 42mm	5" / 6.5" / 8" Deep FFS Snare Drums, IP1465
SST-5035	W7/32 x 35mm	3.5" Deep FFS Snare Drums, M1060
T-062	W7/32 x 52mm	5.5" Deep MCT / SSC Snare Drums, FCP / FCS Snare Drums
T-061L	W7/32 x 47mm	6.5" Deep MCT / SSC Snare Drums, MCT / SSC / FW Toms
T-055	W7/32 x 28mm	3" Deep Piccolo Snare Drums
TR-5052	W7/32 x 52mm	DMP / EXL / EXX / MDT Snare Drums
TR-5047	W7/32 x 47mm	DMP / EXL / EXX / MDT Toms

IP1465 Parts

Number	
NP-104	Rubber O Ring
NP-270	Fiber Washer

Washers for Tension Key Rods

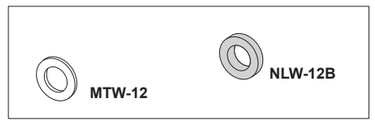

Number	
NLW-12B	Nylon Washer
MTW-12	Metal Washer

F.F.S. SNARE DRUM

Free Floating System Snare Drum

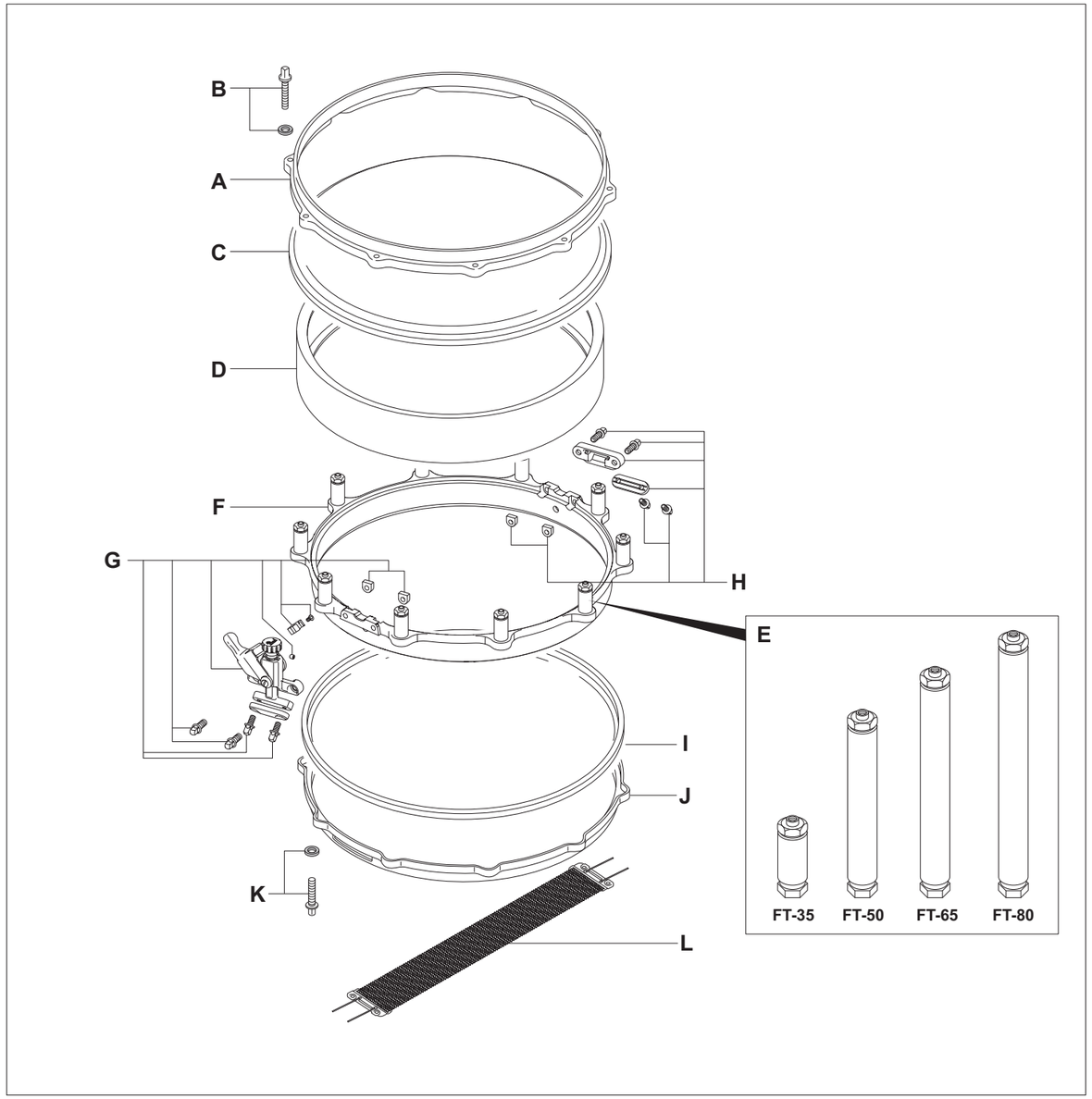

Free Floating System Snare Drum

A	DC-1410	Die-Cast Hoop for Batter Side
B	SST-5035	Tension Key Rod w/Washer for 3.5" Deep SD (one each)
	SST-5042	Tension Key Rod w/Washer for 5" & 6.5" Deep SD (one each)
C		Head for Batter Side
D		Shell
E	FT-35	Lug Post for 3.5" Deep SD
	FT-50	Lug Post for 5" Deep SD
	FT-65	Lug Post for 6.5" Deep SD
	FT-80	Lug Post for 8" Deep SD
F	ARC-1410	Aluminum Ring Chassis ONLY
G	SR-160FA	Release Side Assy. Complete
H	SR-160E	Butt Side Assy. Complete
I		Head for Snare Side
J	DC-1410S	Die-Cast Hoop for Snare Side
K	SST-5035	Tension Key Rod w/Washer for 3.5" Deep SD (one each)
	SST-5042	Tension Key Rod w/Washer for 5" & 6.5" Deep SD (one each)
L	SN-1420I	Ultra Sound Snare Wire "I" Type

PRACTICE PADS

SD-50

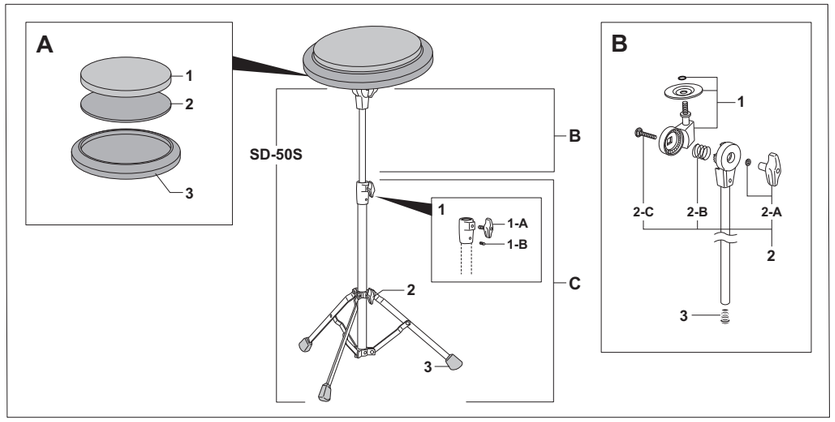

A	PAD-80	Practice Pad Complete
1	NP-202	Rubber Pad
2	NP-202N	Rubber Cushion
3	NP-203	Base
	SD-50S	Stand ONLY for SD-50
B	UT-SD50	Upper Tube Assy. Complete
1	ZD-072SDA	Tilter w/Washer & O-Ring
2	SN-70A	Bolt & Nut Set w/Spring
2-A	UGN-8	Die-Cast Wing Nut w/Washer
2-B	SG-001	Spring
2-C	SC-36B-ED	Clamp Bolt
3	NP-212	Plastic End Cap
C	BA-SD50	Base Assy. Complete
1	PJ-45	Die-Cast Joint Assy. Complete
1-A	UGB-815S	Die-Cast Wing Bolt
1-B	SB-44	Allen Screw
2	UGB-820C	Die-Cast Wing Bolt
3	NP-12P	Rubber Tip (one each)

BD-10

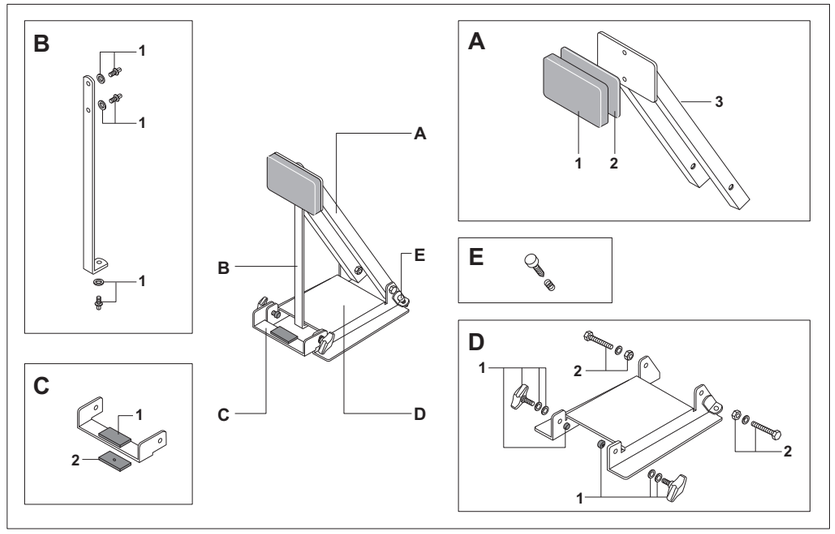

A	DP-10	Pad Assy. Complete
1	NP-201	Rubber Pad
2	NP-201N	Rubber Cushion
3	DP-10B	Base
B	BSB-10	Supporting Bar Assy. Complete
1	KB-610W	Key Bolt w/Washer (one set)
C	CP-10	Clamp Plate Complete
1	NP-140	Rubber Protector
2	NP-518	Rubber Protector
D	BFP-10	Floor Plate Assy. Complete
1	UGB-620WCP	Die-Cast Wing Bolt w/Washers & Cap (one set)
2	SC-144A	Mounting Screw w/Washer & Nut (one set)
E	LT-626	Anchor Screw w/Spring